Catalogue 2011

whisper power

smart energy solutions

WhisperPower smart energy solutions

Emergency and medical vehicles

Commercial craft

Horse boxes and recreational vehicles

Sailing yachts

Autonomous power systems

Motor yachts

Defence vehicles

Demonstration vehicles, broadcast vehicles and special purpose trucks

Tailor made service

Contents

INTRODUCTION

THE WORLD OF WHISPERPOWER

PRODUCTS AND SYSTEMS FOR MARINE APPLICATIONS
- Marine generator systems - 3000/3600 rpm 8
- Marine generator systems - 1500/1800 rpm 12
- Installation accessories 19
- Service kits 21
- Hybrid propulsion & power systems 25

PRODUCTS AND SYSTEMS FOR MOBILE APPLICATIONS
- Genverter power systems - variable speed 38
- Genverter power systems - hybrid technology 40
- Belt Power 42
- Mobile generator systems - 3000/3600 rpm 44
- Mobile generator systems - 1500/1800 rpm 49
- Installation accessories 55

PRODUCTS AND SYSTEMS FOR LAND BASED APPLICATIONS
- Portable Diesel generator 60
- Genverter power systems - variable speed 61
- Genverter power systems - hybrid technology 63
- Custom made systems 65

PRODUCTS AND COMPONENTS FOR GENERAL USE
- Monitoring & control/instrumentation 68
- AC power distribution 70
- Energy Storage: AGM/GEL/Lithium ION batteries 71

GENERAL INFORMATION
- Custom fit with carriages & frames 75
- Specialty products 77
- Where to buy - service support 79
- WarrantyPlan 80
- Reference list 81
- Marketing information 82
- Contact information 90

smart energy solutions

Introducing:

We are proud to introduce you to our company, WhisperPower. Established in 2007 by a highly experienced team of experts, the company has quickly developed into a reliable supplier of power systems that are successfully used all over the world. From China to the US, from Monaco to Stavanger, from Amsterdam to Santos Brasilia.

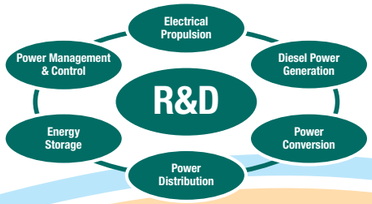

Research & Development is a core activity at WhisperPower. Our Engineering Department develops smart solutions for all areas of the energy system, which serve as the foundation for innovative products and ensure you top quality and maximum efficiency.

This catalogue presents the comprehensive WhisperPower product range

For land and maritime applications, for professional as well as recreational use. We offer a superb selection of advanced high-tech products that meet the very highest requirements.
From generators with capacities from 3.5 to 200 kVA and matching components to custom-composed systems and our series of innovative 'all-in-one' gensets.

Efficient, clean and sustainable systems

WhisperPower offers everything you need for an efficient, clean and exceptionally quiet power system: Smart energy solutions in every aspect. Our top-quality systems and components come with excellent warranty conditions backed up by a healthy global service network. Each product is characterised by its sustainable and reliable operation and exceptionally long life-span as WhisperPower provides premium quality and genuine value for money.

The R&D specialists at WhisperPower develop intelligent, sustainable and above all innovative solutions for every product. One of their current areas of focus is the further development of hybrid technology and power electronics based systems. The use of high-tech mechatronics - the combination of mechanics and electronics - is always centre stage. This offers the foundation for eco-friendly reliability and compact, whisper-quiet generator systems that have the least possible impact on the environment.

This includes electrically controlled diesel engines that supply a constant power quality and optimal efficiency at any speed, resulting in minimal fuel consumption and negligible emissions.The exceptional production and assembly processes at WhisperPower combine our own expertise with outside support when necessary.

Part of the manufacturing process is performed in-house while others are outsourced to leading manufacturers and suppliers worldwide. At all times the entire process remains in the specialist hands of WhisperPower in order to ensure that each product meets the very strictest requirements. A responsible approach to energy is a vital aspect for WhisperPower. This is typified by our headquarters in the green Dutch province of Friesland, where we have been located since January 2009.

*The building is a showcase for the very latest thinking in terms of energy-friendly sustainability and includes facilities such as solar cells and climate control based on an eco-energy recovery system. We save as much energy as possible in all our daily operations, using thermal storage for residual heat or power.
Tours of these groundbreaking new premises are available upon request.*

smart energy solutions

a young but highly experienced company WhisperPower

*The not-so-hidden force behind WhisperPower is Roel J. ter Heide, who has been professionally involved in the development of sustainable and independent power systems since the 1980s.
In 2007 Roel and a team of experienced professionals gave a new impulse to his enthusiasm for this industry by establishing the independent company WhisperPower. The new and energetic company started off with a wealth of knowledge and experience; an excellent foundation for success. Ter Heide's focus is on innovative and sustainable generator systems, hybrid technology and, among other things, the further development of emission-neutral fuel cells. WhisperPower has already raised the global standard in the field of energy systems, and will continue to do so in the future.*

For small and large power demands

WhisperPower aims to be your reliable partner in energy. We offer a wealth of expertise to provide you with the best possible solutions. Road signs or household power, large-scale consumption for professional or recreational purposes, fire engines or tugboats; whatever your energy demands, WhisperPower can provide you with the most intelligent solution and an excellent service network.

Leading in sustainability and intelligent systems

WhisperPower is a global leader in the field of sustainability, with an ever-increasing range of 'all-in-one' Genverter systems; compact, efficient and, if possible, hybrid power systems that combine all the necessary functions. Generator, battery, inverter, switch system and power management; all components are perfectly balanced within a single smart system. One compact box provides a complete system that is easy to install without cabling or component issues.

Whisper-silent operation and low emissions

With WhisperPower you achieve silent power generation with maximum efficiency and minimal emissions. Operation and power management are unprecedentedly easy thanks to the intelligent application of electronics and display technologies.

This makes every WhisperPower system easy to operate, even via remote control or wireless internet.

Global service network

Based on the widespread previous experience of the company founders, WhisperPower established a global network for distribution, sales and service within a short time. Our end users can count on professional support and all the service expected from a premium brand. Providing the necessary training and documentation, we ensure that every WhisperPower system and product is supported by an appropriate degree of expertise and experience.

Rest assured

Choosing WhisperPower gives you the assurance of the global WhisperPower WarrantyPlan. We continue to take responsibility for our products long after the delivery, just as parents do for their children.

WhisperPower has a great deal to offer, now and in the future, including the best possible solution for your energy demands. This catalogue is designed to introduce you to our complete range of silent, sustainable and independent power systems.
We look forward to providing you with more personally tailored information!

for on the water

Smart energy solutions

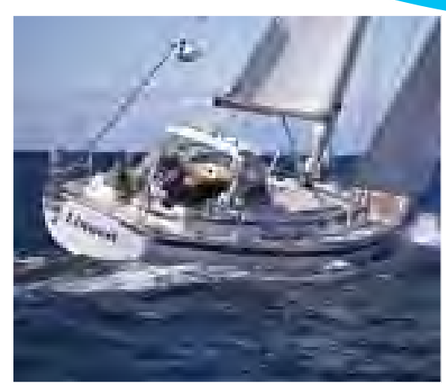

A well performing power system is an absolute must on commercial boats as well as on pleasure yachts. WhisperPower delivers the power with generator systems for all demands. Airco and heating, winches and commercial equipment, sensitive electronics and all that is needed for comfort. You are welcome to see for yourself, a complete installation has been fitted onboard the INDEPENDENCE, WhisperPower's test and demo motor yacht.

smart energy solutions

M-SC 3.5
Diesel generator
3.000 RPM
Super Compact series

DDC control panel 'Digital Diesel Control',
supplied as standard with all sets

Art. no.		
40900600	M-SC 3.5 230 V / 50 Hz MARINE	wet exhaust
41200500	M-SC 3.5 230 V / 50 Hz MARINE/MB [1]	

MAIN SPECIFICATIONS

Nominal power [2]	3 kW at 3.000 RPM
Nominal voltage [3]	230 V - 13 A
Output frequency	50 Hz
Power factor / cos phi	1
Voltage tolerance	± 7%
Frequency tolerance (Hz)	± 5%
Voltage regulation	capacitor
Starter battery	12 V
Battery charge current	auxiliary winding 4 A
Alternator	water-cooled, no brushes, synchronous
Sound level [4]	58 dBA

SPECIFICATIONS DIESEL ENGINE

Engine model	OC60
Number of cylinders	1
Cylinder capacity	276 cc
Bore & stroke	72 x 68 mm
Air consumption	0.38 m³/min
Engine cooling	oil-cooled
Fuel consumption (no load - full load)	0.7-1.2 l/hour

REMOTE CONTROL FOR WHISPER GENERATOR

40209102	DDC panel: Digital Diesel Control, standard for every Whisper generator
40209102	Additional 2nd panel: DDC panel/slave version for second start/stop location
	See page 69 for optional displays, controls and pc-link

ACCESSORIES & OPTIONS

40900606	M-SC 3.5 230 V / 50 Hz MARINE	ungrounded, wet exhaust
40900655	M-SC 3.5 120 V / 60 Hz MARINE	wet exhaust, USA version
40230201	Water inlet kit 12.5 mm (1/2")	wet exhaust
40230272	Syphon breaker kit 12.5 mm (1/2")	wet exhaust
40230251	DELTA Exhaust kit 40 mm (1 5/8")	wet exhaust
40230261	DELTA Water-gas separ. kit 40 mm (1 5/8")	wet exhaust
40230207	Base plate kit M-SC 3.5	
40230217	Anti-vibration mounts, up to 280 kg	

[1] Can be connected to a MasterBus/MasterView Easy panel without interface
[2] peak power 200% [3] 120 V-240 V / 50 or 60 Hz available as well [4] at 7 mtrs

DIMENSIONS & WEIGHT

Length:	505 mm
Width:	400 mm
Height:	500 mm
Dry weight:	97 kg
Dry exhaust pipe:	Ø 1 inch BSP
Wet exhaust:	Ø 40 mm
Location oil refill cap:	top & side
Max. operating angle:	25° in all directions

smart energy solutions

INSTALLATION DRAWING M-SC 3.5

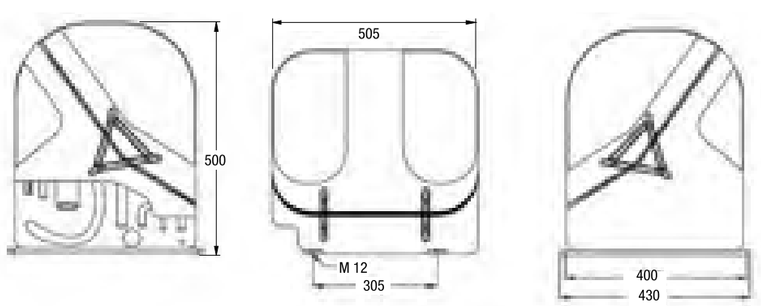

M-SC 6
Diesel generator
3.000 RPM
Super Compact series

M-SC 6 in metal sound shield

M-SC 6P in polyester sound shield

Art. no.		
41102005	M-SC 6 230 V / 50 Hz MARINE	wet exhaust
40902005	M-SC 6 230 V / 50 Hz MARINE P	wet exhaust

MAIN SPECIFICATIONS

Nominal power [2]	5 kW at 3.000 RPM
Nominal voltage [3]	230 V - 22 A
Output frequency	50 Hz
Power factor / cos phi	1
Voltage tolerance	± 5%
Frequency tolerance (Hz)	± 5%
Voltage regulation	capacitor
Starter battery	12 V
Battery charge current	alternator 40 A
Alternator	water-cooled, no brushes, synchronous
Sound level [4]	56 dBA

SPECIFICATIONS DIESEL ENGINE

Engine model	L2E
Number of cylinders	2
Cylinder capacity	635 cc
Bore & stroke	2 x 76 x 70 mm
Air consumption	0.95 m³/min
Engine cooling	indirect watercooling
Fuel consumption (no load - full load)	1-2.5 l/hour

REMOTE CONTROL FOR WHISPER GENERATOR

40209102	DDC panel: Digital Diesel Control, standard for every Whisper generator
40209102	Additional 2nd panel: DDC panel/slave version for second start/stop location
	See page 69 for optional displays, controls and pc-link

ACCESSORIES & OPTIONS

41102006	M-SC 6 230 V / 50 Hz MARINE	ungrounded, wet exhaust
41102030	M-SC 6 230 V / 50 Hz MARINE	keelcooling, dry exhaust
41102055	M-SC 6 120/240 V / 60 Hz MARINE	wet exhaust, USA version
40230211	Water inlet kit 20 mm (3/4")	wet exhaust
40230273	Syphon breaker kit 20 mm (3/4")	wet exhaust
40230251	DELTA Exhaust kit 40 mm (1 5/8")	wet exhaust
40230261	DELTA Water-gas separ. kit 40 mm (1 5/8")	wet exhaust
40230209	Base plate kit M-SC 6P	only for polyester version
40230217	Anti-vibration mounts, up to 280 kg	only for polyester version
40201303	Boxcooler kit	keelcooling, dry exhaust
40201320	Dry exhaust kit 1"	keelcooling, dry exhaust

[2] peak power 200% [3] 120 V-240 V / 50 or 60 Hz available as well [4] at 7 mtrs

DIMENSIONS & WEIGHT

	M-SC 6	M-SC 6P
Length:	690 mm	660 mm
Width:	525 mm	495 mm
Height:	580 mm	550 mm
Dry weight:	184 kg	178 kg
Dry exhaust pipe:	Ø 1 inch BSP	
Wet exhaust:	Ø 40 mm	
Location oil refill cap:	top & side	
Max. operating angle:	25° in all directions	

smart energy solutions

INSTALLATION DRAWING M-SC 6

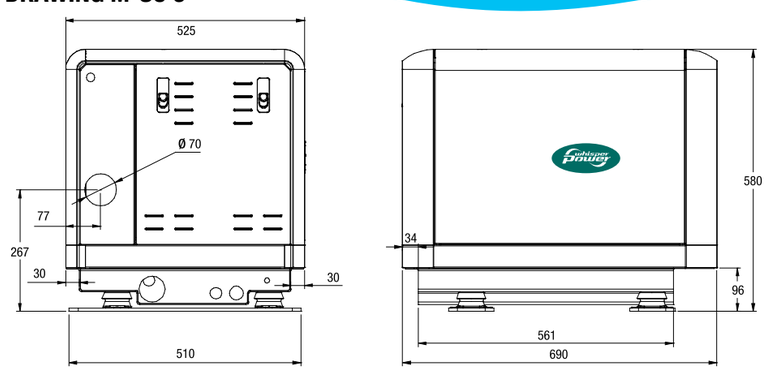

M-SC 8
Diesel generator
3.000 RPM
Super Compact series

M-SC 8 in metal sound shield

M-SC 8P in polyester sound shield

Art. no.		
41103005	M-SC 8 230 V / 50 Hz MARINE	wet exhaust
41103005	M-SC 8 230 V / 50 Hz MARINE P	wet exhaust

MAIN SPECIFICATIONS

Nominal power [2]	6,4 kW at 3.000 RPM
Nominal voltage [3]	230 V - 28 A
Output frequency	50 Hz
Power factor / cos phi	1
Voltage tolerance [4]	± 5%
Frequency tolerance (Hz) [4]	± 1%
Voltage regulation	capacitor
Starter battery	12 V
Battery charge current	alternator 40 A
Alternator	water-cooled, no brushes, synchronous
Sound level [5]	56 dBA

SPECIFICATIONS DIESEL ENGINE

Engine model	L2E
Number of cylinders	2
Cylinder capacity	635 cc
Bore & stroke	2 x 76 x 70 mm
Air consumption	0.95 m³/min
Engine cooling	indirect watercooling
Fuel consumption (no load - full load)	1-2.5 l/hour

REMOTE CONTROL FOR WHISPER GENERATOR

40209102	DDC panel: Digital Diesel Control, standard for every Whisper generator
40209102	Additional 2nd panel: DDC panel/slave version for second start/stop location
	See page 69 for optional displays, controls and pc-link

ACCESSORIES & OPTIONS

41103006	M-SC 8 230 V / 50 Hz MARINE	ungrounded, wet exhaust
41103055	M-SC 8 120/240 / V 60 Hz MARINE	wet exhaust, USA version
40230211	Water inlet kit 20 mm (3/4")	wet exhaust
40230273	Syphon breaker kit 20 mm (3/4")	wet exhaust
40230251	DELTA Exhaust kit 40 mm (1 5/8")	wet exhaust
40230261	DELTA Water-gas separ. kit 40 mm (1 5/8")	wet exhaust
40230209	Base plate kit M-SC 8P	only for polyester version
40230217	Anti-vibration mounts, up to 280 kg	only for polyester version
40201303	Boxcooler kit	keelcooling, dry exhaust
40201320	Dry exhaust kit 1"	keelcooling, dry exhaust

[2] peak power 200% [3] 120 V-240 V / 50 or 60 Hz available as well [4] controlled by electronic governor [5] at 7 mtrs

DIMENSIONS & WEIGHT

	M-SC 8	M-SC 8P
Length:	690 mm	660 mm
Width:	525 mm	495 mm
Height:	580 mm	550 mm
Dry weight:	184 kg	178 kg
Dry exhaust pipe:	Ø 1 inch BSP	
Wet exhaust:	Ø 40 mm	
Location oil refill cap:	top & side	
Max. operating angle:	25° in all directions	

INSTALLATION DRAWING M-SC 8

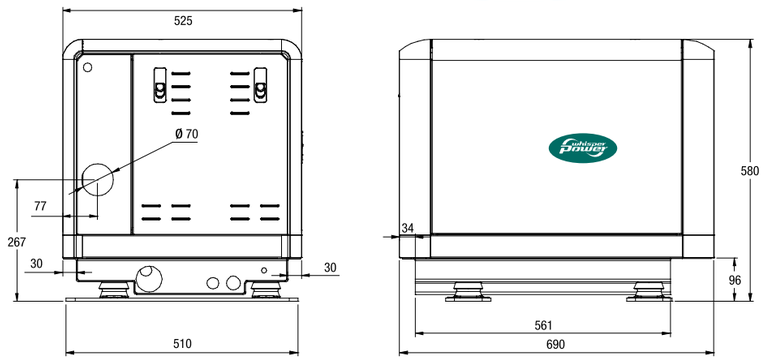

smart energy solutions

M-SC 10
Diesel generator
3.000 RPM
Super Compact series

M-SC 10 in metal sound shield

M-SC 10P in polyester sound shield

Art. no.		
41104005	M-SC 10 230 V / 50 Hz MARINE	wet exhaust
40904005	M-SC 10 230 V / 50 Hz MARINE P	wet exhaust

MAIN SPECIFICATIONS

Nominal power [2]	9,4 kW at 3.000 RPM
Nominal voltage [3]	230 V - 40 A
Output frequency	50 Hz
Power factor / cos phi	1
Voltage tolerance [4]	± 5%
Frequency tolerance (Hz) [4]	± 1%
Voltage regulation	capacitor
Starter battery	12 V
Battery charge current	alternator 40 A
Alternator	water-cooled, no brushes, synchronous
Sound level [5]	58 dBA

SPECIFICATIONS DIESEL ENGINE

Engine model	L3E
Number of cylinders	3
Cylinder capacity	952 cc
Bore & stroke	3 x 76 x 70 mm
Air consumption	1.43 m³/min
Engine cooling	indirect watercooling
Fuel consumption (no load - full load)	1-4 l/hour

REMOTE CONTROL FOR WHISPER GENERATOR

40209102	DDC panel: Digital Diesel Control, standard for every Whisper generator
40209102	Additional 2nd panel: DDC panel/slave version for second start/stop location
	See page 69 for optional displays, controls and pc-link

ACCESSORIES & OPTIONS

41104006	M-SC 10 230 V / 50 Hz MARINE	ungrounded, wet exhaust
41104055	M-SC 11 120/240 V / 60 Hz MARINE	wet exhaust, USA version
40230211	Water inlet kit 20 mm (3/4")	wet exhaust
40230273	Syphon breaker kit 20 mm (3/4")	wet exhaust
40230251	DELTA Exhaust kit 40 mm (1 5/8")	wet exhaust
40230261	DELTA Water-gas separ. kit 40 mm (1 5/8")	wet exhaust
40201303	Boxcooler kit	keelcooling, dry exhaust
40201875	Dry exhaust kit 1 1/2"	keelcooling, dry exhaust

[2] peak power 200% [3] 120 V-240 V / 50 or 60 Hz available as well [4] controlled by electronic governor [5] at 7 mtrs

DIMENSIONS & WEIGHT

	M-SC 10	M-SC 10P
Length:	805 mm	810 mm
Width:	525 mm	525 mm
Height:	580 mm	615 mm
Dry weight:	215 kg	210 kg
Dry exhaust pipe:	Ø 1,5 inch BSP	
Wet exhaust:	Ø 40 mm	
Location oil refill cap:	top & side	
Max. operating angle:	25° in all directions	

INSTALLATION DRAWING M-SC 10

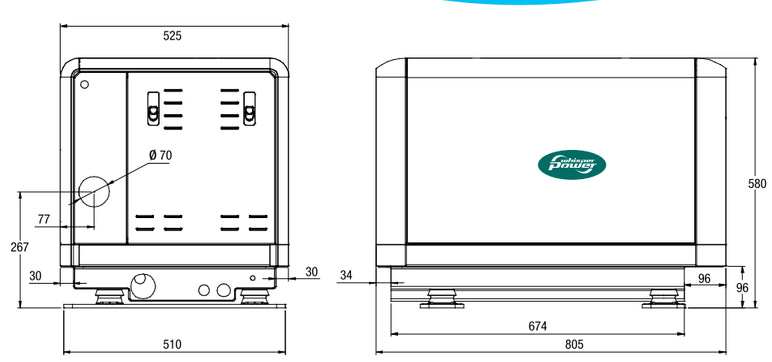

smart energy solutions

M-SQ 6
Diesel generator
1.500 RPM
Super Quiet series

DDC control panel 'Digital Diesel Control',
supplied as standard with all sets

Art. no.		
41105005	M-SQ 6 230 V / 50 Hz MARINE	wet exhaust

MAIN SPECIFICATIONS

Nominal power [2]	5,7 kW at 1.500 RPM
Nominal voltage [3]	230 V - 25 A
Output frequency	50 Hz
Power factor / cos phi	1
Voltage tolerance [4]	± 5%
Frequency tolerance (Hz) [4]	± 1%
Voltage regulation	capacitor
Starter battery	12 V
Battery charge current	alternator 40 A
Alternator	water-cooled, no brushes, synchronous
Sound level [5]	51 dBA

SPECIFICATIONS DIESEL ENGINE

Engine model	L3E
Number of cylinders	3
Cylinder capacity	952 cc
Bore & stroke	3 x 76 x 70 mm
Air consumption	0.8 m³/min
Engine cooling	indirect watercooling
Fuel consumption (no load - full load)	1-3 l/hour

REMOTE CONTROL FOR WHISPER GENERATOR

40209102	DDC panel: Digital Diesel Control, standard for every Whisper generator
40209102	Additional 2nd panel: DDC panel/slave version for second start/stop location
	See page 69 for optional displays, controls and pc-link

ACCESSORIES & OPTIONS

41105006	M-SQ 6 230 V / 50 Hz MARINE	ungrounded, wet exhaust
41105030	M-SQ 6 230 V / 50 Hz MARINE	keelcooling, dry exhaust
41105055	M-SQ 6 120/240 V / 60 Hz MARINE	wet exhaust, USA version
40230211	Water inlet kit 20 mm (3/4")	wet exhaust
40230273	Syphon breaker kit 20 mm (3/4")	wet exhaust
40230251	DELTA Exhaust kit 40 mm (1 5/8")	wet exhaust
40230261	DELTA Water-gas separ. kit 40 mm (1 5/8")	wet exhaust
40201303	Boxcooler kit	keelcooling, dry exhaust
40201320	Dry exhaust kit 1"	keelcooling, dry exhaust

[2] peak power 200% [3] 120 V-240 V / 50 or 60 Hz available as well [4] controlled by electronic governor [5] at 7 mtrs

DIMENSIONS & WEIGHT

Length:	805 mm
Width:	525 mm
Height:	580 mm
Dry weight:	240 kg
Dry exhaust pipe:	Ø 1.5 inch BSP
Wet exhaust:	Ø 40 mm
Location oil refill cap:	top & side
Max. operating angle:	25º in all directions

smart energy solutions

INSTALLATION DRAWING M-SQ 6

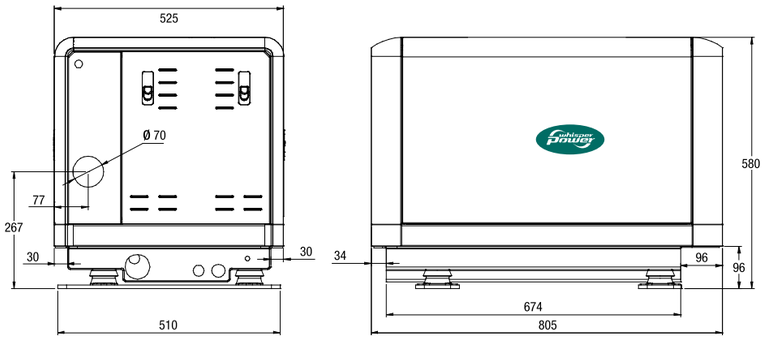

M-SQ 8
Diesel generator
1.500 RPM
Super Quiet series

DDC control panel 'Digital Diesel Control',
supplied as standard with all sets

Art. no.		
41106005	M-SQ 8 230 V / 50 Hz MARINE	wet exhaust

MAIN SPECIFICATIONS

Nominal power [2]	8 kW at 1.500 RPM
Nominal voltage [3]	230 V - 35 A
Output frequency	50 Hz
Power factor / cos phi	1
Voltage tolerance	± 5%
Frequency tolerance (Hz)	± 5%
Voltage regulation	capacitor
Starter battery	12 V
Battery charge current	alternator 50 A
Alternator	water-cooled, no brushes, synchronous
Sound level [4]	54 dBA

SPECIFICATIONS DIESEL ENGINE

Engine model	S3L2
Number of cylinders	3
Cylinder capacity	1318 cc
Bore & stroke	3 x 78 x 92 mm
Air consumption	1.1 m³/min
Engine cooling	indirect watercooling
Fuel consumption (no load - full load)	1-3 l/hour

REMOTE CONTROL FOR WHISPER GENERATOR

40209102	DDC panel: Digital Diesel Control, standard for every Whisper generator
40209102	Additional 2nd panel: DDC panel/slave version for second start/stop location
	See page 69 for optional displays, controls and pc-link

ACCESSORIES & OPTIONS

41106006	M-SQ 8 230 V / 50 Hz MARINE	ungrounded, wet exhaust
41106030	M-SQ 8 230 V / 50 Hz MARINE	keelcooling, dry exhaust
41106055	M-SQ 9.5 120/240 V 60 Hz MARINE	wet exhaust, USA version
40230211	Water inlet kit 20 mm (3/4")	wet exhaust
40230273	Syphon breaker kit 20 mm (3/4")	wet exhaust
40230252	DELTA Exhaust kit 51 mm (2")	wet exhaust
40230262	DELTA Water-gas separ. kit 51 mm (2")	wet exhaust
40201873	Boxcooler kit	keelcooling, dry exhaust
40201875	Dry exhaust kit 1 1/2"	keelcooling, dry exhaust

[2] peak power 200% [3] 120 V-240 V / 50 or 60 Hz available as well [4] at 7 mtrs

DIMENSIONS & WEIGHT

Length:	900 mm
Width:	575 mm
Height:	640 mm
Dry weight:	334 kg
Dry exhaust pipe:	Ø 1.5 inch BSP
Wet exhaust:	Ø 51 mm
Location oil refill cap:	top & side
Max. operating angle:	25º in all directions

smart energy solutions

INSTALLATION DRAWING M-SQ 8

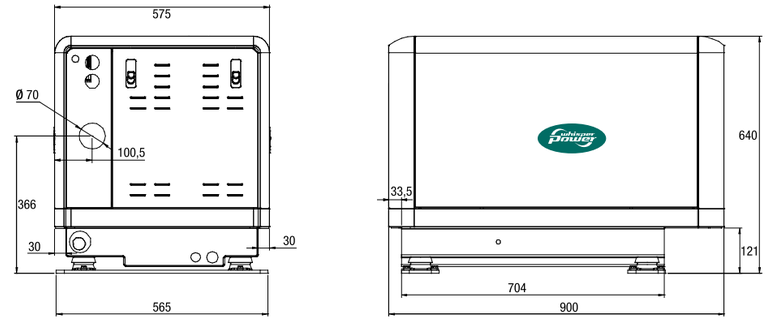

M-SQ 10
Diesel generator
1.500 RPM
Super Quiet series

DDC control panel 'Digital Diesel Control',
supplied as standard with all sets

Art. no.		
41109005	M-SQ 10 230 V / 50 Hz MARINE	wet exhaust

MAIN SPECIFICATIONS

Nominal power [2]	9,4 kW at 1.500 RPM
Nominal voltage [3]	230 V - 40 A
Output frequency	50 Hz
Power factor / cos phi	1
Voltage tolerance [4]	± 5%
Frequency tolerance (Hz) [4]	± 1%
Voltage regulation	capacitor
Starter battery	12 V
Battery charge current	alternator 50 A
Alternator	water-cooled, no brushes, synchronous
Sound level [5]	54 dBA

SPECIFICATIONS DIESEL ENGINE

Engine model	S3L2
Number of cylinders	3
Cylinder capacity	1318 cc
Bore & stroke	3 x 78 x 92 mm
Air consumption	1.1 m³/min
Engine cooling	indirect watercooling
Fuel consumption (no load - full load)	1-3 l/hour

REMOTE CONTROL FOR WHISPER GENERATOR

40209102	DDC panel: Digital Diesel Control, standard for every Whisper generator
40209102	Additional 2nd panel: DDC panel/slave version for second start/stop location
	See page 69 for optional displays, controls and pc-link

ACCESSORIES & OPTIONS

41109006	M-SQ 10 230 V / 50 Hz MARINE	ungrounded, wet exhaust
41109055	M-SQ 11 120/240 V / 60 Hz MARINE	wet exhaust, USA version
40230211	Water inlet kit 20 mm (3/4")	wet exhaust
40230273	Syphon breaker kit 20 mm (3/4")	wet exhaust
40230252	DELTA Exhaust kit 51 mm (2")	wet exhaust
40230262	DELTA Water-gas separ. kit 51 mm (2")	wet exhaust-
40201873	Boxcooler kit	keelcooling, dry exhaust
40201875	Dry exhaust kit 1 1/2"	keelcooling, dry exhaust

[2] peak power 200% [3] 120V-240 V / 50 or 60 Hz available as well [4] controlled by electronic governor [5] at 7 mtrs

DIMENSIONS & WEIGHT

Length:	900 mm
Width:	575 mm
Height:	640 mm
Dry weight:	334 kg
Dry exhaust pipe:	Ø 1.5 inch BSP
Wet exhaust:	Ø 51 mm
Location oil refill cap:	top & side
Max. operating angle:	25º in all directions

INSTALLATION DRAWING M-SQ 10

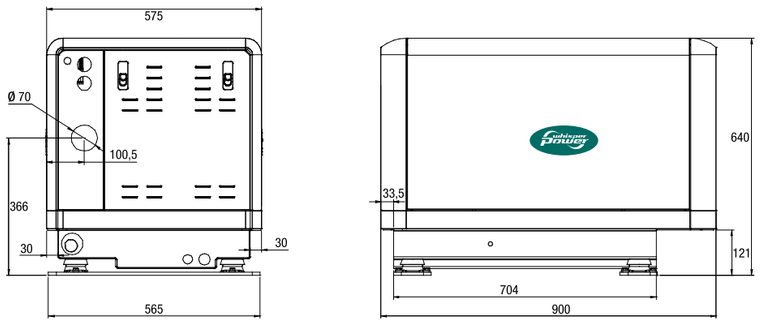

smart energy solutions

M-SQ 12
Diesel generator
1.500 RPM
Super Quiet series

DDC control panel 'Digital Diesel Control',
supplied as standard with all sets

Art. no.		
41107005	M-SQ 12 230 V / 50 Hz MARINE	

MAIN SPECIFICATIONS

Nominal power [2]	12 kW at 1.500 RPM
Nominal voltage [3]	230 V - 52 A / 3-phase optional
Output frequency	50 Hz
Power factor / cos phi	1
Voltage tolerance [4]	± 5%
Frequency tolerance (Hz) [4]	± 1%
Voltage regulation	capacitor
Starter battery	12 V
Battery charge current	alternator 50 A
Alternator	water-cooled, no brushes, synchronous
Sound level [5]	55 dBA

SPECIFICATIONS DIESEL ENGINE

Engine model	S4L2
Number of cylinders	4
Cylinder capacity	1758 cc
Bore & stroke	4 x 78 x 92 mm
Air consumption	1.5 m³/min
Engine cooling	indirect watercooling
Fuel consumption (no load - full load)	1-4 l/hour

REMOTE CONTROL FOR WHISPER GENERATOR

40209102	DDC panel: Digital Diesel Control, standard for every Whisper generator
40209102	Additional 2nd panel: DDC panel/slave version for second start/stop location
	See page 69 for optional displays, controls and pc-link

ACCESSORIES & OPTIONS

41107006	M-SQ 12 230 V / 50 Hz MARINE	ungrounded, wet exhaust
41107030	M-SQ 12 230 V / 50 Hz MARINE	keelcooling, dry exhaust
41107305	M-SQ 12 230/400 V / 50 Hz MARINE	wet exhaust, 3-phase
41107055	M-SQ 15 120/240 V / 60 Hz MARINE	wet exhaust, USA version
41107355	M-SQ 15 120/208 V / 60 Hz MARINE	wet exhaust, USA version
40230211	Water inlet kit 20 mm (3/4")	wet exhaust, dual voltage
40230273	Syphon breaker kit 20 mm (3/4")	wet exhaust
40230252	DELTA Exhaust kit 51 mm (2")	wet exhaust
40230262	DELTA Water-gas separ. kit 51 mm (2")	wet exhaust
40201873	Boxcooler kit	keelcooling, dry exhaust
40201875	Dry exhaust kit 1 1/2"	keelcooling, dry exhaust

[2] peak power 200% [3] 120 V-240 V / 50 or 60 Hz available as well [4] controlled by electronic governor [5] at 7 mtrs

DIMENSIONS & WEIGHT

Length:	1060 mm
Width:	575 mm
Height:	640 mm
Dry weight:	380 kg
Dry exhaust pipe:	Ø 1.5 inch BSP
Wet exhaust:	Ø 51 mm
Location oil refill cap:	top & side
Max. operating angle:	25º in all directions

INSTALLATION DRAWING M-SQ 12

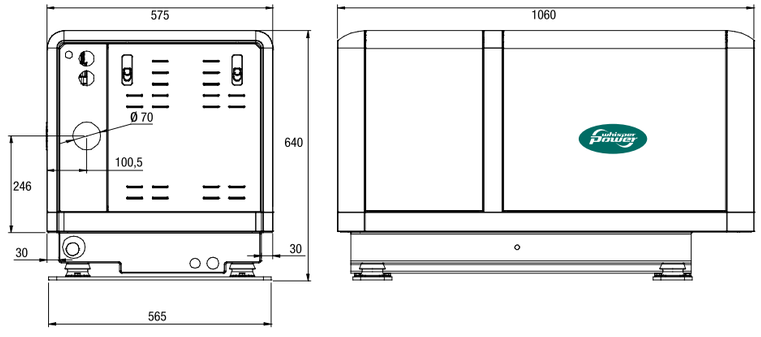

smart energy solutions

M-SQ 16
Diesel generator
1.500 RPM
Super Quiet series

DDC control panel 'Digital Diesel Control',
supplied as standard with all sets

Art. no.		
41108005	M-SQ 16 230 V / 50 Hz MARINE	

MAIN SPECIFICATIONS

Nominal power [2]	16 kW at 1.500 RPM
Nominal voltage [3]	230 V - 70 A / 3-phase optional
Output frequency	50 Hz
Power factor / cos phi	1
Voltage tolerance	± 5%
Frequency tolerance (Hz)	± 3%
Voltage regulation	capacitor
Starter battery	12 V
Battery charge current	alternator 50 A
Alternator	water-cooled, no brushes, synchronous
Sound level [4]	56 dBA

SPECIFICATIONS DIESEL ENGINE

Engine model	S4Q2
Number of cylinders	4
Cylinder capacity	2505 cc
Bore & stroke	4 x 88 x 103 mm
Air consumption	2.1 m³/min
Engine cooling	indirect watercooling
Fuel consumption (no load - full load)	1-5 l/hour

REMOTE CONTROL FOR WHISPER GENERATOR

40209102	DDC panel: Digital Diesel Control, standard for every Whisper generator
40209102	Additional 2nd panel: DDC panel/slave version for second start/stop location
	See page 69 for optional displays, controls and pc-link

ACCESSORIES & OPTIONS

41108006	M-SQ 16 230 V / 50 Hz MARINE	ungrounded, wet exhaust
41108030	M-SQ 16 230 V / 50 Hz MARINE	keelcooling, dry exhaust
41108305	M-SQ 16 230/400 V / 50 Hz MARINE	wet exhaust, 3-phase
41108055	M-SQ 20 120/240 V / 60 Hz MARINE	wet exhaust
41108355	M-SQ 20 120/208 V / 60 Hz MARINE	wet exhaust
40230221	Water inlet kit 25 mm (1")	wet exhaust
40230274	Syphon breaker kit 25 mm (1")	wet exhaust
40230252	DELTA Exhaust kit 51 mm (2")	wet exhaust
40230262	DELTA Water-gas separ. kit 51 mm (2")	wet exhaust
40201874	Boxcooler kit	keelcooling, dry exhaust
40201875	Dry exhaust kit 1½"	keelcooling, dry exhaust

[2] peak power 200% [3] 120 V-240 V / 50 or 60 Hz available as well [4] at 7 mtrs

DIMENSIONS & WEIGHT

Length:	1160 mm
Width:	680 mm
Height:	700 mm
Dry weight:	454 kg
Dry exhaust pipe:	Ø 1.5 inch BSP
Wet exhaust:	Ø 51 mm
Location oil refill cap:	top
Max. operating angle:	25º in all directions

smart energy solutions

INSTALLATION DRAWING M-SQ 16

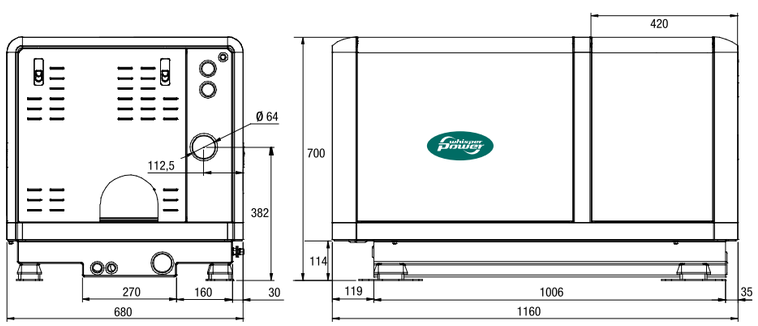

M-SQ 20
Diesel generator
1.500 RPM
Super Quiet series

DDC control panel 'Digital Diesel Control',
supplied as standard with all sets

Art. no.		
41101205	M-SQ 20 230 V / 50 Hz MARINE	

MAIN SPECIFICATIONS

Nominal power [2]	20 kW at 1.500 RPM
Nominal voltage [3]	230 V - 87 A
Output frequency	50 Hz
Power factor / cos phi	1
Voltage tolerance	± 2%
Frequency tolerance (Hz)	± 3%
Voltage regulation	AVR
Starter battery	12 V
Battery charge current	alternator 50 A
Alternator	air-cooled, no brushes, synchronous
Sound level [4]	58 dBA

SPECIFICATIONS DIESEL ENGINE

Engine model	S4S
Number of cylinders	4
Cylinder capacity	3331 cc
Bore & stroke	4 x 94 x 120 mm
Air consumption	2.8 m³/min
Engine cooling	indirect watercooling
Fuel consumption (no load - full load)	1-6 l/hour

REMOTE CONTROL FOR WHISPER GENERATOR

40209102	DDC panel: Digital Diesel Control, standard for every Whisper generator
40209102	Additional 2nd panel: DDC panel/slave version for second start/stop location
	See page 69 for optional displays, controls and pc-link

ACCESSORIES & OPTIONS

41101206	M-SQ 20 230 V / 50 Hz MARINE	ungrounded, wet exhaust
41101230	M-SQ 20 230 V / 50 Hz MARINE	keelcooling, dry exhaust
40230221	Water inlet kit 25 mm (1")	wet exhaust
40230274	Syphon breaker kit 25 mm (1")	wet exhaust
40230254	DELTA Exhaust kit 63 mm (2½")	wet exhaust
40230264	DELTA Water-gas separ. kit 63 mm (2½")	wet exhaust
40201894	Boxcooler kit	keelcooling, dry exhaust
40201889	Dry exhaust kit 2"	keelcooling, dry exhaust

[2] peak power 200% [3] 120 V-208 V / 50 or 60 Hz available as well [4] at 7 mtrs

DIMENSIONS & WEIGHT

Length:	1260 mm
Width:	680 mm
Height:	800 mm
Dry weight:	580 kg
Dry exhaust pipe:	Ø 2 inch BSP
Wet exhaust:	Ø 63 mm
Location oil refill cap:	top
Max. operating angle:	25º in all directions

smart energy solutions

INSTALLATION DRAWING M-SQ 20

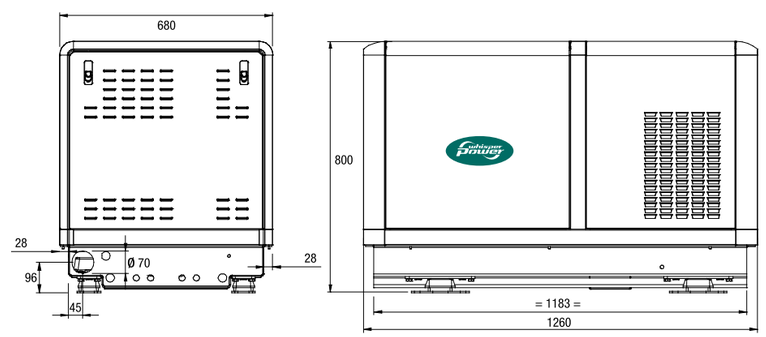

M-SQ 25
Diesel generator
1.500 RPM
Super Quiet series

DDC control panel 'Digital Diesel Control',
supplied as standard with all sets

Art. no.		
41101005	M-SQ 25 230 V / 50 Hz MARINE	

MAIN SPECIFICATIONS

Nominal power [2]	25 kW at 1.500 RPM
Nominal voltage [3]	230 V - 108 A
Output frequency	50 Hz
Power factor / cos phi	1
Voltage tolerance	± 2%
Frequency tolerance (Hz)	± 3%
Voltage regulation	AVR
Starter battery	12 V
Battery charge current	alternator 50 A
Alternator	air-cooled, no brushes, synchronous
Sound level [4]	58 dBA

SPECIFICATIONS DIESEL ENGINE

Engine model	S4S
Number of cylinders	4
Cylinder capacity	3331 cc
Bore & stroke	4 x 94 x 120 mm
Air consumption	2.8 m^3/min
Engine cooling	indirect watercooling
Fuel consumption (no load - full load)	1-8 l/hour

REMOTE CONTROL FOR WHISPER GENERATOR

40209102	DDC panel: Digital Diesel Control, standard for every Whisper generator
40209102	Additional 2nd panel: DDC panel/slave version for second start/stop location
	See page 69 for optional displays, controls and pc-link

ACCESSORIES & OPTIONS

41101006	M-SQ 25 230 V / 50 Hz MARINE	ungrounded, wet exhaust
41101030	M-SQ 25 230 V / 50 Hz MARINE	keelcooling, dry exhaust
41101305	M-SQ 25 230 V / 50 Hz MARINE	wet exhaust, 3-phase
41101055	M-SQ 30 120/240 V / 60 Hz MARINE	wet exhaust, dual voltage
41101355	M-SQ 30 120/240 V / 60 Hz MARINE	wet exhaust, 3-phase
40230221	Water inlet kit 25 mm (1")	wet exhaust
40230274	Syphon breaker kit 25 mm (1")	wet exhaust
40230254	DELTA Exhaust kit 63 mm (2½")	wet exhaust
40230264	DELTA Water-gas separ. kit 63 mm (2½")	wet exhaust
40201894	Boxcooler kit	keelcooling, dry exhaust
40201889	Dry exhaust kit 2"	keelcooling, dry exhaust

[2] peak power 200% [3] 120 V-240 V / 50 or 60 Hz available as well [4] at 7 mtrs

DIMENSIONS & WEIGHT

Length:	1260 mm
Width:	680 mm
Height:	800 mm
Dry weight:	580 kg
Dry exhaust pipe:	Ø 2 inch BSP
Wet exhaust:	Ø 63 mm
Location oil refill cap:	top
Max. operating angle:	25° in all directions

INSTALLATION DRAWING M-SQ 25

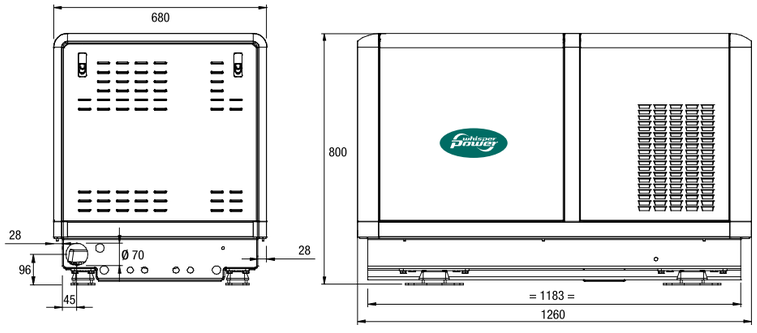

smart energy solutions

M-SQ
Generator PTO

Art. no.		
50201399	PTO kit SAE A 9-tooth	M-SQ 8 / 10 / 12 / 16
50201398	PTO kit SAE B 13-tooth	M-SQ 8 / 10 / 12 / 16
50201598	PTO kit SAE B 13-tooth	M-SQ 20 / 25

WHISPERPOWER M-SQ GENERATOR AS POWER SOURCE FOR HYDRAULICS: POWER TAKE OFF

Hydraulics are frequently used on boats, and with good reason: a pump system with pressurised oil supplies a constant and immediately available mechanical force for the bowthruster, stabilisers, auxiliary propeller or sail controls.

A WhisperPower generator (8-25 kVA models) can function as an exellent hydraulic power source in this context. Using Power Take Off, you can easily adapt your diesel engine for an additional task for example to power a hydraulic pump.

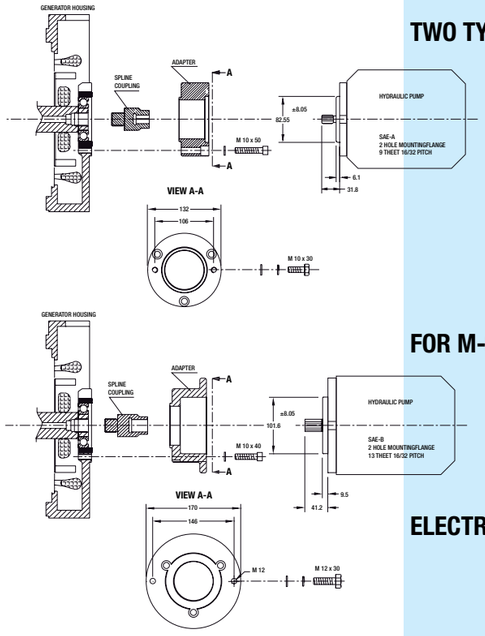

TWO TYPES: SAE A AND SAE B

Power Take Off is a stainless steel flange connected to the Whisper engine drive shaft, to whitch the central hydraulic pump is fitted.

Two types are aveilable:
- for hydraulic pumps with 9-tooth SAE A connection
- for hydraulic pumps with 13-tooth SAE B connection

Hydraulic pumps are usually available from the supplier of the relevant hydraulic system. Consult your WhisperPower agent for advice on this issue.

FOR M-SQ SERIES FROM 8 KW

Power Take Off requires more power, especially if your generator needs to power the hydraulic system as well as the rest of your equipment.
It is therefore only available for the M-SQ 8 / 10 / 12 / 16 / 20 and 25 - 50 Hz (M-SQ 7 / 9.5 / 11 / 15 / 20 and 30 - 60 Hz) models.

ELECTRICITY, HYDRAULIC PRESSURE OR BOTH

Using Power Take Off, the M-SQ can be set to three different functions:
- generating electric current
- powering the hydraulic system
- a combination of both

Simultaneous use of these functions depends on teh energy required by each: naturally every generator model has a maximum capacity.

smart energy solutions

Marine Installation kits

Water inlet kit

DELTA Water/gas separator kit

DELTA Exhaust kit

Dry exhaust kit

Art. no.

WATER INLET KITS

Water inlet kit consisting of:
Water strainer, hoses, hose clamps, through-hull fitting and seacock

40230201	Water inlet kit 12.5 mm (1/2") for M-SC 3.5 - wet exhaust
40230211	Water inlet kit 20 mm (3/4")
40230221	Water inlet kit 25 mm (1")

SYPHON BREAKER KITS

Syphon breaker kit consisting of:
Syphon breaker, hoses and hose clamps

40230272	Syphon breaker kit 12.5 mm (1/2") for M-SC 3.5 - wet exhaust
40230273	Syphon breaker kit 20 mm (3/4")
40230274	Syphon breaker kit 25 mm (1")

DELTA EXHAUST KITS

DELTA Exhaust kit consisting of:
Exhaust silencer/waterlock with unique rotating connections, through-hull fitting, hoses and hose clamps

40230251	DELTA Exhaust kit 40 mm (1 5/8")	
40230252	DELTA Exhaust kit 51 mm (2")	
40230254	DELTA Exhaust kit 63 mm (2 1/2")	
40230093	DELTA Silencer/waterlock	40 mm
40230094	DELTA Silencer/waterlock	51 mm
40230190	DELTA Silencer/waterlock L 51	16 liter
40230191	DELTA Silencer/waterlock L 63	16 liter
40230192	DELTA Silencer/waterlock L 76	16 liter

DELTA WATER/GAS SEPARATOR KITS

DELTA Water/gas separator kit consisting of:
Water/gas separator with unique rotating connections, through-hull fitting, hoses, hose clamps and seacock

40230261	DELTA Water-gas separator kit 40 mm (1 5/8")	
40230262	DELTA Water-gas separator kit 51 mm (2")	
40230264	DELTA Water-gas separator kit 63 mm (2 1/2")	
40230097	DELTA Water-gas separator	40 mm
40230098	DELTA Water-gas separator	51 mm
40230193	DELTA Water-gas separator L 51	16 liter
40230194	DELTA Water-gas separator L 63	16 liter
40230195	DELTA Water-gas separator L 76	16 liter

DRY EXHAUST KIT

The Dry Exhaust kit contains two silencers:
an absorption and a resonance muffler including fitting material

40201320	Dry exhaust kit 1" for the M-SC 3.5 / 6 / 10 / 11 and M-SQ 6 / 7 keelcooling
40201875	Dry exhaust kit 1 1/2" for the M-SQ 8 / 9.5 / 10 / 11 / 12 / 15 / 16 / 20 keelcooling
40201889	Dry exhaust kit 2" for the M-SQ 25 / 30 keelcooling

Information about starter batteries for Whisper generators: see page 70

smart energy solutions

Marine installation kits

Fuel kit

Anti-vibration kit,
optional for 3000 RPM models

Art. no.

BOXCOOLER KITS

40201303	Boxcooler for M-SC 6 and M-SQ 6/7
40201873	Boxcooler kit for M-SQ 8/9.5/10/11/12/15
40201874	Boxcooler kit for M-SQ 16/20 - 60 Hz
40201894	Boxcooler kit for M-SQ 25/30 and M-SQ 20 - 50 Hz

FUEL KIT FOR MARINE USE

40230205	Fuel kit for the M-SC and M-SQ generator systems

Fuel kit consisting of: fuel filter/water separator, hose clamps and couplings.

BASE PLATE KITS

40230207	Base plate kit M-SC 3.5 (includes art. No. 40230217)
40230209	Base plate kit M-SC 6/8P (includes art. No. 40230217) only polyester version
40230217	Anti-vibration mounts, up to 280 kg

Anti-vibration kit consisting of: shock mounts and installation material.

WATERHOSE FOR COOLING

50220057	Rubber flexible coolant hose (1/2")	13 x 21 mm (drum 20 m)
50220011	Rubber flexible coolant hose (3/4")	18 x 26 mm (drum 20 m)
50220012	Rubber flexible coolant hose (1)	25 x 34 mm (drum 20 m)
50220013	Rubber flexible coolant hose (1 1/4")	32 x 41 mm (drum 20 m)
50220055	Transparant coolant hose with metal spiral	13 x 19 mm (drum 20 m)
50220056	Transparant coolant hose with metal spiral	19 x 26 mm (drum 20 m)
50220050	Transparant coolant hose with metal spiral	25 x 33 mm (drum 20 m)

MARINE FUEL HOSE

CE ISO 7840 A1 / SAE J 1527 USCG A1

50220063	Marine fuel hose for diesel	8 x 16 mm (drum 20 m)

EXHAUST HOSE

CE ISO 13363

50220033	Exhaust hose	40 mm (1 5/8") Ø (inner diameter)
50220035	Exhaust hose	51 mm (2") Ø (inner diameter)
50220036	Exhaust hose	63 mm (½") Ø (inner diameter)

The Whisper Power rubber exhaust hose is a very flexible currugated hose (but smooth inside for low back pressure).
This exhaust hose complies with US ABYC - and CE standards for marine exhaust hose (ISO 13363)

BATTERY CABLE

50213070	Red	16 mm² (drum 50 m)
50213071	Black	16 mm² (drum 50 m)
50213075	Red	25 mm² (drum 25 m)
50213076	Black	25 mm² (drum 25 m)
50213085	Red	35 mm² (drum 25 m)
50213086	Black	35 mm² (drum 25 m)

smart energy solutions

Marine installation kits

SERVICE KITS FOR MARINE USE

These kits are available for maintenance or to have the essential parts at hand.
The A-kits include filters, V-belts and impeller.
Our B-kits are more extensive, including seals and various mechanical parts.

40201860	A-kit	M-SC 6 and W-SC 10 - 3000 rpm
40201861	B-kit	M-SC 6 - 3000 rpm
40201761	B-kit	M-SC 10 - 3000 rpm
40201860	A-kit	M-SQ 6 - 1500 rpm
40201761	B-kit	M-SQ 6 - 1500 rpm
40201460	A-kit	M-SQ 8 and W-SQ 12 - 1500 rpm
40201653	B-kit	M-SQ 8 and M-SQ 10 - 1500 rpm
40201461	B-kit	M-SQ 12 - 1500 rpm
40201360	A-kit	M-SQ 16 - 1500 rpm
40201361	B-kit	M-SQ 16 - 1500 rpm
40201560	A-kit	M-SQ 20 and W-SQ 25 - 1500 rpm
40201561	B-kit	M-SQ 20 and W-SQ 25 - 1500 rpm

B-kit contents

Calorifier kit

Spare parts catalogue:
Now available in print (76 pages)
or on our website

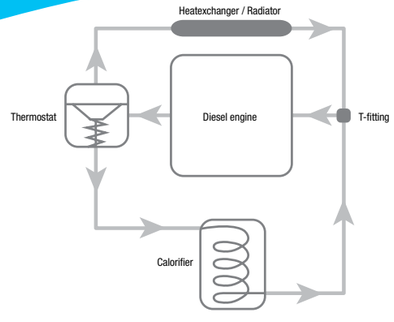

CALORIFIER KIT - HOT WATER FROM THE GENERATOR

It is very simple to use a WhisperPower Generator as a source for hot water. The temperature of the coolant oulet is higher than 90°C. This hot coolant can be used to warm up a calorifier. Whitin 15 minutes you can have 80 liters of hot water (80°C). Installation kits to connect the calorifiers are available:

40245030	Calorifier kit for the M SC 6 / 8 / 10 and M-SQ 6
40245031	Calorifier kit for the M-SC 8 / 10 / 12

The hot water can also be used for heating.
This priciple is well known as CHP (Combined Heat Power generation). Other models on request

smart energy solutions

Marine installation example

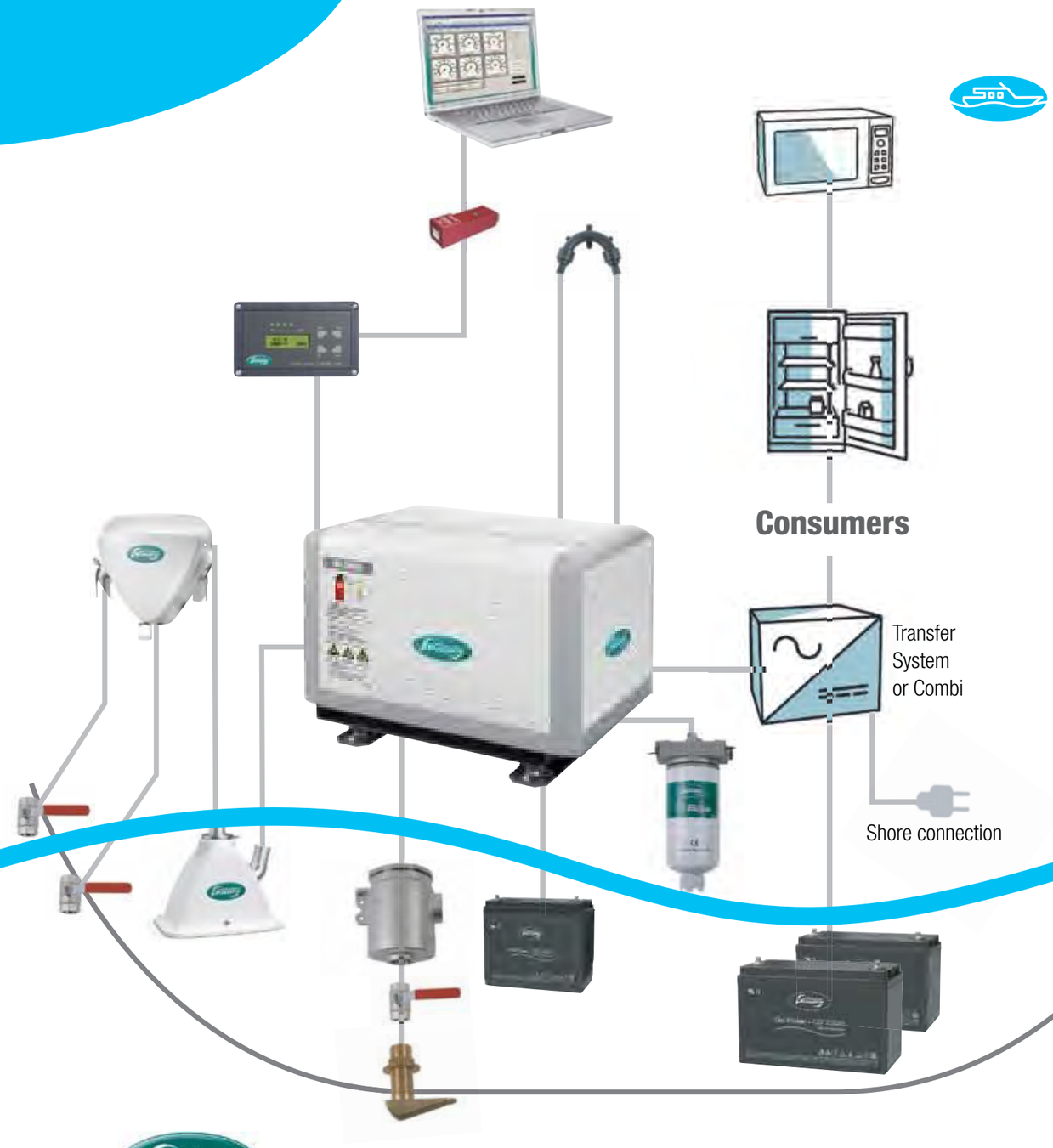

smart energy solutions

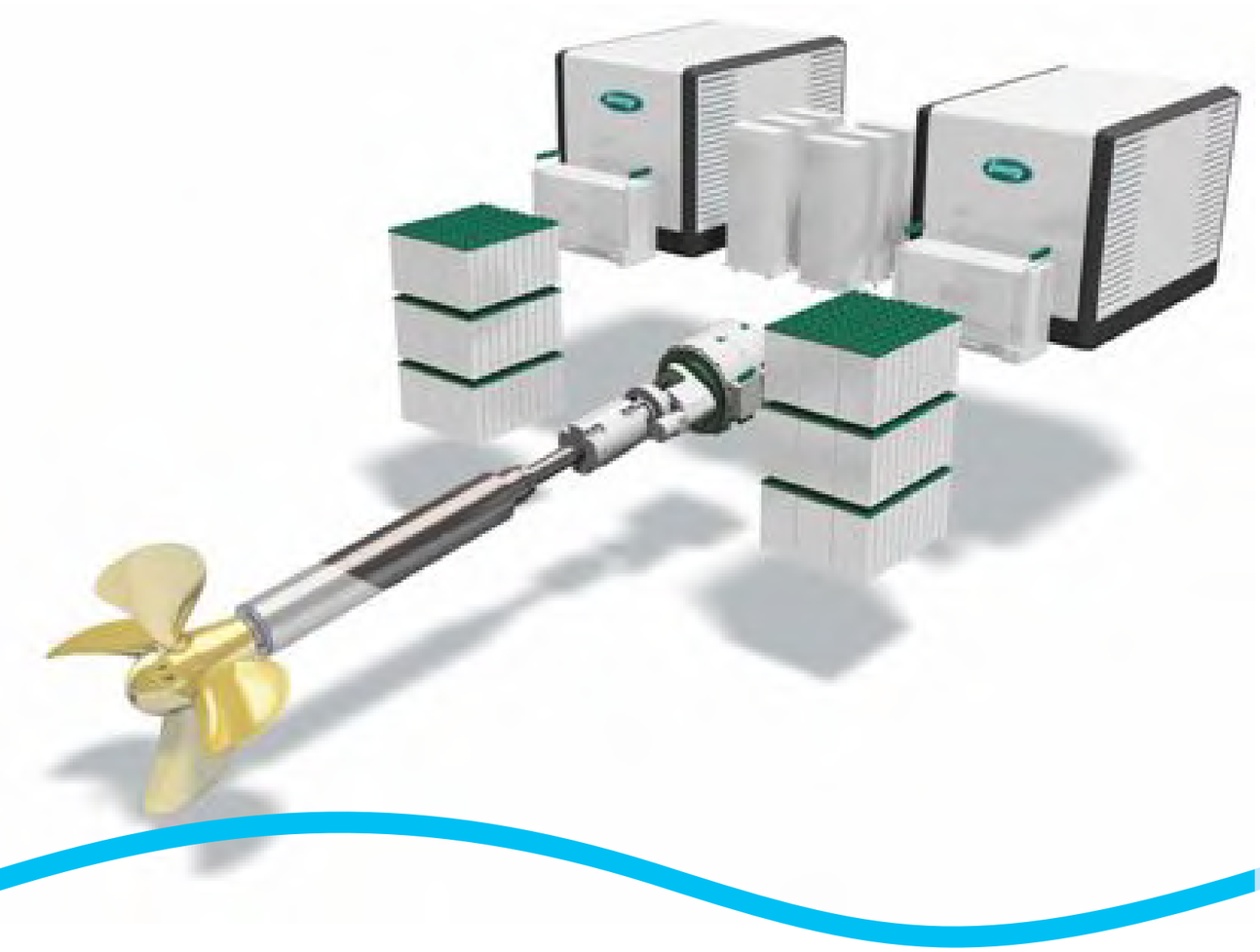

combined power & E-propulsion systems
The Power of Green

Our Genverter 50/100/200 kW variable speed diesel generators are the heart of our new Hybrid Power systems for pleasure yachts and small commercial craft. By bringing power systems into the propulsion equation we create smart control of both energy demands and sources.

Our Hybrid Power propulsion and power systems generate, store, use, exchange and control onboard energy in an independent and integrated way. Main propulsion, bow thrusters, stern thruster, hydraulic systems and power systems work together in a smart way. The system can load balance peak periods by sharing the supply and energy from the storage.

Why Buy WhisperPower's Hybrid:

- Reduction of components by smart sharing of functionality
- Optimized load balancing of the diesel engine(s)
- Fuel saving and improved system efficiency
- Reduction of emissions and audible noise
- Extended periods of silent power without running engines
- Space saving and freedom of engine room configuration
- Lower maintenance costs and extended life span of the engine
- Cleaner running of engines, less soot and black spots on the vessel

In off-peak periods the power sources are in optimal running mode and store unused energy. As a consequence, diesel generators can be downscaled as peak power demand will be supplied by the (Lithium ION) batteries.
On the next 2 pages we explain the system concepts we offer together with an overview of our high power Genverter variable speed generators. More information about the entire systems can be obtained on request.

HYBRID

smart energy solutions

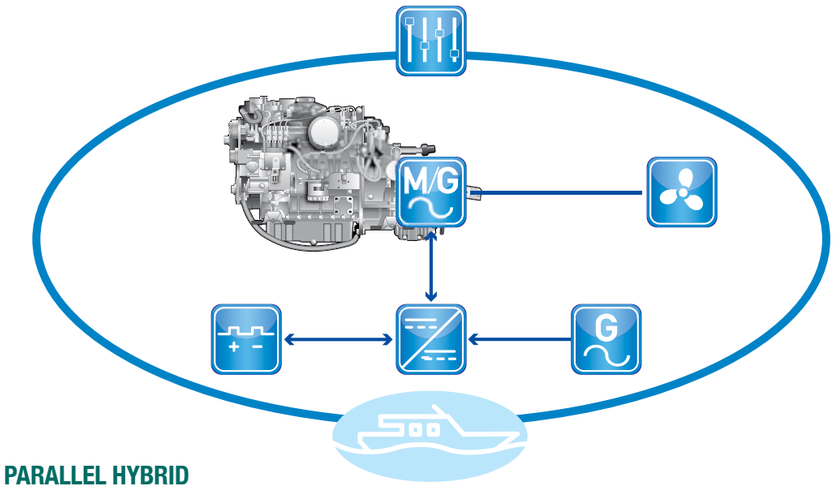

THE POWER OF PARALLEL HYBRID

Parallel Hybrid maintains the mechanical connection between the engine and propeller shaft, with the electric motor acting on the drive shaft in parallel with the engine. You can drive the propeller directly from the engine or from the electric motor, or from both. You can also disconnect the propeller for a stand alone generator function. The engine is disconnected during regeneration.

THE MODULES

Hy-Gen power generators

Variable speed generators based on intelligent, permanent magnet alternator technology, utilising ultra-compact diesel engines and fitted in a sound shield. The power packs feed a high DC power bus, connected to the propulsion systems and the DC-AC power conversion system for the hotel load.

Hy-Store power storage

Deep cycle, long-life Lithium-ION battery provides emissionfree power for propulsion and/or power generation, without operating the auxiliary generators (Hy-Gen) or using the engines. Capacity, voltage and mechanical configuration vary with each system.

smart energy solutions

the power of
innovative technologies

Two key Hybrid Power concepts

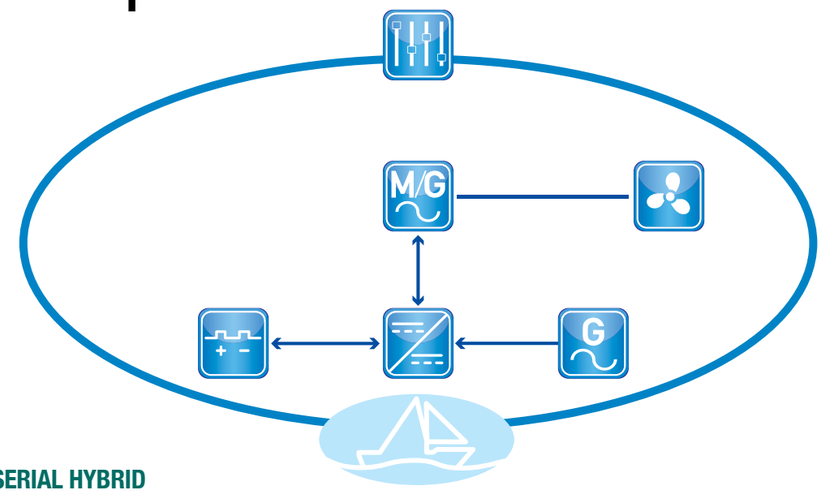

THE POWER OF SERIAL HYBRID

In a Serial Hybrid system the conventional diesel engine is replaced by an electrical motor. A battery bank is connected to the common electric power bus, which is connected to the motor. The electrical energy is either provided by variable speed power generators or by the battery bank. With large batteries you can have long periods of electric propulsion (and/or driving electrical appliances) without resorting to the generator.

Hy-Charge battery charging

Sophisticated system for recharging the Lithium-ION battery bank from the Hy-Gen power packs or shore power. The battery can also be recharged during sailing by the shaft generator. In all cases the battery bank can be recharged and discharged over very short periods without harming its functionality or life-span.

Hy-Invert AC power supply

The highly efficient DC to AC inverters smoothly convert power from the various DC sources into a sine wave single and 3-phase 230/400 V AC / 50 Hz (or 60 Hz). With power ratings of 30 kVA, 60 kVA or 90 kVA, there is sufficient power tooperate all the domestic appliances including airco.

Hy-Control

All system components are connnected to the overall power management system, which controls and monitors the entire system. This advanced automation system is configured according the yacht's requirements and fitted with a manual override to ensure redundancy.

Hy-Grid distribution system

The DC power distribution system that supplies electric power on demand from the power sources to the power consumers. An isolated and laminated copper busbar rail system with various switches, built into modular cabinets.

Hy-Prop propulsion

Propulsion is taken care of by one or more high-efficiency permanent magnet electrical motors, driving the propeller shaft through a gearbox. This electric drive is powered by either the Hy-Store or Hy-Gen module. Bow and sternthrusters are operated in a similar way.

HYBRID

M-GV 50 Genverter

Hybrid variable speed
High DC generator

Art. no.

41006005 M-GV 50 Genverter

VARIABLE SPEED HYBRID GENERATORS FOR E-PROPULSION AND POWER GENERATION

MAIN SPECIFICATIONS (PRELIMINARY)

Nominal Power	50 kW at 3000 RPM 33 kW at 1500 RPM
Rated Output voltage	up to 750 VDC
Product technology	variable speed, light weight high speed diesel generator with water cooled compact 3-phase permanet magnet flywheel integrated alternator
RPM window	1250-2400 RPM
Sound level	58,5 dBA at 1500 RPM at 7 mrts

SPECIFICATIONS DIESEL ENGINE

Engine model	MO144M38
Engine technology	4-stroke, turbo charged, intercooled, direct-injection, fresh water cooling, mono block, high speed combustion diesel engine
Output at Crankshaft	106 kW (144 HP) at 3800 rpm
Number of cylinders	4 in line
Injection system	two stage unit injectors, mechanically driven but electronically controlled with injection pressures up to 2000 bar
Displacement	3200 cm^3 (195 cid)
Bore	85 mm (3.35')
Stroke	94 mm (3.7')
Compression ratio	17,0
Max. torque	255 Nm at 2500 RPM
Fuel consumtion	220 G/kWh
Exhaust emissions	EPA Tier II, RCD/2003/44
Ø Sea water inlet, outlet	25 mm (1"), 89 mm (3½")
Electrical system	12 VDC system plug in solution; 14 V / 80 A Alternator; 2 pole installation as standard; engine diagnostic as standard

50 kW	RPM	kW
	1000	8
	1250	14
	1500	33
	3000	50

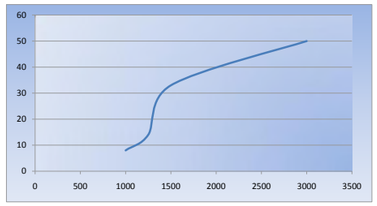

RPM versus power

GENERATOR BACK-END SPECIFICATIONS

Model PM	Synchronous Permanent Magnet, Maintenance free, water cooled alternator
Rated Power	50 kW at 3000 RPM
Rated output Voltage	max 750 VDC
Number of phase and freqency	3 up to 400 Hz
Efficiency	> 92 %
Generator cooling	Integrated in fresh water circuit of motor, 6 ltr/min flow rate at max 75°C
Level of protection	IP65, shielded cables
Bearing concept	Double bearing concept, intergated on board (dis)-assembly functionality

INSTALLATION SPECIFICATIONS

Dry Weight	390 kg incl. sound shield, excl. converter
Dimension Soundshield	1200 x 860 x 860 mm
Sound shield shock mounts	4 units
Max. operation angle	25° in all directions

HYBRID CONVERTER SPECIFICATIONS

Topology	Uni directional water cooled AC to DC converter
Input voltage	3 phase PM, up to 400 Hz
Efficiency range	90 - 96 %
Rated output voltage	750 VDC to 500 VDC
Nominal Power	50 kW at 750 VDC 33 kW at 500 VDC

USER INTERFACE SPECIFICATIONS

WHCC - Whisper Hybrid Control Centre. Engine interface, multipurpose communication protocol based on SAEJ1939 Can 2.0 databus

Power electronics

ACCESSORIES

Up to 200 kVA modulair swich mode bi-directional DC/DC converter for high voltage battery charging.
Up to 200 kVA modulair swich mode bi-directional DC/AC inverter for hotel load and stable 220/400 VAC 50/60 Hz.
Power management control centre HY-Control, multipurpose display and load management control functions.
Up to 80 kWh of high voltage Lithium ION battery-pack for silent mode, E-propulsion and hybrid functionality.

DIMENSIONS & WEIGHT (preliminary)

Length:	1200 mm
Width:	860 mm
Height:	860 mm
Dry weight:	480 kg

INSTALLATION DRAWING M-GV 50

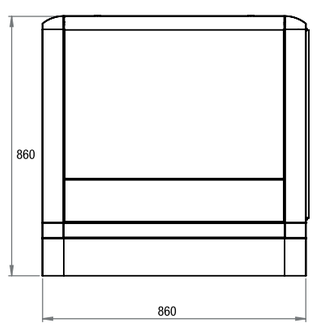

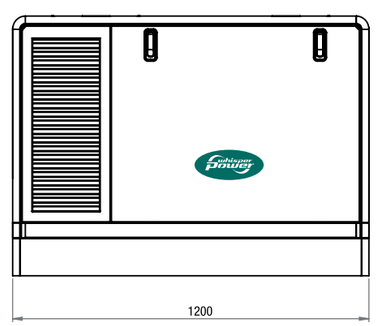

smart energy solutions

smart energy solutions

M-GV 100 Genverter

Hybrid variable speed High DC generator

Art. no.

41007005 M-GV 100 Genverter

VARIABLE SPEED HYBRID GENERATORS FOR E-PROPULSION AND POWER GENERATION

MAIN SPECIFICATIONS (PRELIMINARY)

Nominal Power	100 kW at 2400 RPM 40 kW at 1500 RPM
Rated Output voltage	up to 750 VDC
Product technology	variable speed, light weight high speed diesel generator with water cooled compact 3-phase permanet magnet flywheel intgerated alternator
RPM window	1250-3000 RPM
Sound level	58,5 dBA at 1500 RPM at 7 mrts

SPECIFICATIONS DIESEL ENGINE

Engine model	MO156K25
Engine technology	4-stroke, turbo charged, intercooled, direct-injection, fresh water cooling, mono block, high speed combustion diesel engine
Output at Crankshaft	110 kW (150 HP) at 2500 RPM
Number of cylinders	6 in line
Injection system	two stage unit injectors, mechanically driven but electronically controlled with injection pressures up to 2000 bar
Displacement	3200 cm^3 (195 cid)
Bore	85 mm (3.35")
Stroke	94 mm (3.7")
Compression ratio	17,0
Max. torque	450 Nm at 1550 RPM
Fuel consumtion	220 G/kWh
Exhaust emissions	EPA Tier II, Tier III ready, RCD/2003/44
Ø Sea water inlet, outlet	25 mm (1"), 89 mm (3.5")
Electrical system	12 VDC system plug in solution; 14 V / 80 A Alternator; 2 pole installation as standard; engine diagnostic as standard

Power electronics

ACCESSORIES

Up to 200 kVA modulair swich mode bi-directional DC/DC converter for high voltage battery charging.
Up to 200 kVA modulair swich mode bi-directional DC/AC inverter for hotel load and stable 220/400 VAC 50/60 Hz.
Power management control centre HY-Control, multipurpose display and load management control functions.
Up to 80 kWh of high voltage Lithium ION battery-pack for silent mode, E-propulsion and hybrid functionality.

smart energy solutions

100 kW	RPM	kW
	1000	8
	1250	14
	1500	40
	2400	100

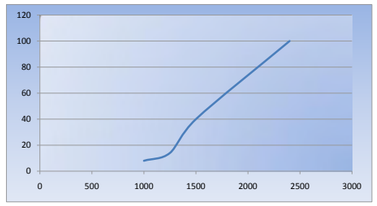

RPM versus power

DIMENSIONS & WEIGHT (preliminary)

Length:	1260 mm
Width:	860 mm
Height:	860 mm
Dry weight:	480 kg

smart energy solutions

GENERATOR BACK-END SPECIFICATIONS

Model PM	Synchronous Permanent Magnet, Maintenance free, water cooled alternator
Rated Power	100 kW at 2400 RPM
Rated output Voltage	max 750 VDC
Number of phase and freqency	3 up to 400 Hz
Efficiency	> 92 %
Generator cooling	Integrated in fresh water circuit of motor, 6 ltr/min flow rate at max 75°C
Level of protection	IP65, shielded cables
Bearing concept	Double bearing concept, intergated on board (dis)-assembly functionality

INSTALLATION SPECIFICATIONS

Dry Weight	480 kg incl. sound shield, excl. converter
Dimension Soundshield	1260 x 860 x 860 mm
Sound shield shock mounts	4 units
Max. operation angle	25° in all directions

HYBRID CONVERTER SPECIFICATIONS

Topology	Uni directional water cooled AC to DC converter
Input voltage	3 phase PM, up to 400 Hz
Efficiency range	90 - 96 %
Rated output voltage	750 VDC to 500 VDC
Nominal Power	100 kW at 750 VDC 60 kW at 500 VDC

USER INTERFACE SPECIFICATIONS

WHCC - Whisper Hybrid Control Centre. Engine interface, multipurpose communication protocol based on SAEJ1939 Can 2.0 databus

INSTALLATION DRAWING M-GV 100

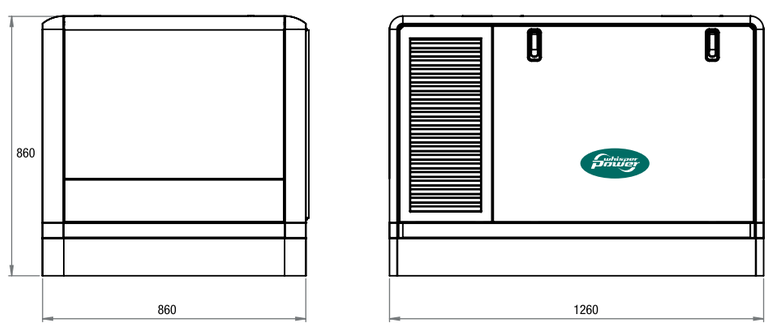

M-GV 200 Genverter

Hybrid variable speed
High DC generator

Art. no.

41008005 M-GV 200 Genverter

VARIABLE SPEED HYBRID GENERATORS FOR E-PROPULSION AND POWER GENERATION

MAIN SPECIFICATIONS (PRELIMINARY)

Nominal Power	200 kW at 4500 RPM 40 kW at 1500 RPM
Rated Output voltage	up to 750 VDC
Product technology	variable speed, light weight high speed diesel generator with water cooled compact 3-phase permanet magnet flywheel integrated alternator
RPM window	1250-4500 RPM
Sound level	58,5 dBA at 1500 RPM at 7 mrts

SPECIFICATIONS DIESEL ENGINE

Engine model	MO306H43WJ
Engine technology	4-stroke, turbo charged, intercooled, direct-injection, fresh water cooling, mono block, high speed combustion diesel engine
Output at Crankshaft	215 kW (295 HP) at 4300 RPM
Number of cylinders	6 in line
Injection system	two stage unit injectors, mechanically driven but electronically controlled with injection pressures up to 2000 bar
Displacement	3200 cm^3 (195 cid)
Bore	85 mm (3.35')
Stroke	94 mm (3.7')
Compression ratio	17,0
Max. torque	540 Nm at 3800 RPM
Fuel consumtion	215 G/kWh
Exhaust emissions	EPA Tier II, RCD/2003/44
Ø Sea water inlet, outlet	25 mm (1"), 89 mm (3.5")
Electrical system	12 V system plug in solution; 14V / 80 A Alternator; 2 pole installation as standard; engine diagnostic as standard

Power electronics

ACCESSORIES

Up to 200 kVA modulair swich mode bi-directional DC/DC converter for high voltage battery charging.
Up to 200 kVA modulair swich mode bi-directional DC/AC inverter for hotel load and stable 220/400 VAC 50/60 Hz.
Power management control centre HY-Control, multipurpose display and load management control functions.
Up to 80 kWh of high voltage Lithium ION battery-pack for silent mode, E-propulsion and hybrid functionality.

smart energy solutions

200 kW	RPM	kW
	1000	8
	1250	14
	1500	40
	4500	200

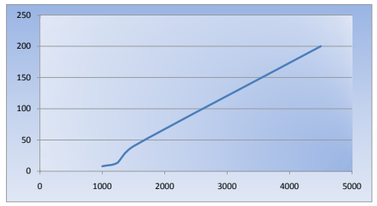

RPM versus power

DIMENSIONS & WEIGHT (preliminary)

Length:	1400 mm
Width:	860 mm
Height:	860 mm
Dry weight:	480 kg

smart energy solutions

GENERATOR BACK-END SPECIFICATIONS

Model PM	Synchronous Permanent Magnet, Maintenance free, water cooled alternator
Rated Power	200 kW at 4500 RPM
Rated output Voltage	max 750 VDC
Number of phase and freqency	3 up to 400 Hz
Efficiency	> 92 %
Generator cooling	Integrwated in fresh water circuit of motor, 6 ltr/min flow rate at max 75°C
Level of protection	IP65, shielded cables
Bearing concept	Double bearing concept, intergated on board (dis)-assembly functionality

INSTALLATION SPECIFICATIONS

Dry Weight	480 kg incl. sound shield, excl. converter
Dimension Soundshield	1400 x 860 x 860 mm
Sound shield shock mounts	4 units
Max. operation angle	25° in all directions

HYBRID CONVERTER SPECIFICATIONS

Topology	Uni directional water cooled AC to DC converter
Input voltage	3 phase PM, up to 400 Hz
Efficiency range	90 - 96 %
Rated output voltage	750 VDC to 500 VDC
Nominal Power	200 kW at 750 VDC 120 kW at 500 VDC

USER INTERFACE SPECIFICATIONS

WHCC - Whisper Hybrid Control Centre. Engine interface, multipurpose communication protocol based on SAEJ1939 Can 2.0 databus

INSTALLATION DRAWING M-GV 200

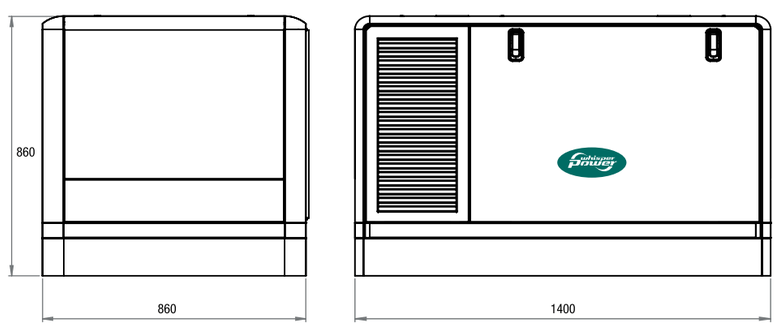

for mobile use

Smart energy solutions

Customised power is essential for specific applications and a certain level of comfort in mobile facilities. This requires intelligent and sustainable solutions that are also environmentally friendly. WhisperPower offers a wide range of generators and genset systems that come with everything you need for easy installation or application; whether in a promotional vehicle, mobile surgery, luxury horse trailer or recreational vehicle.

smart energy solutions

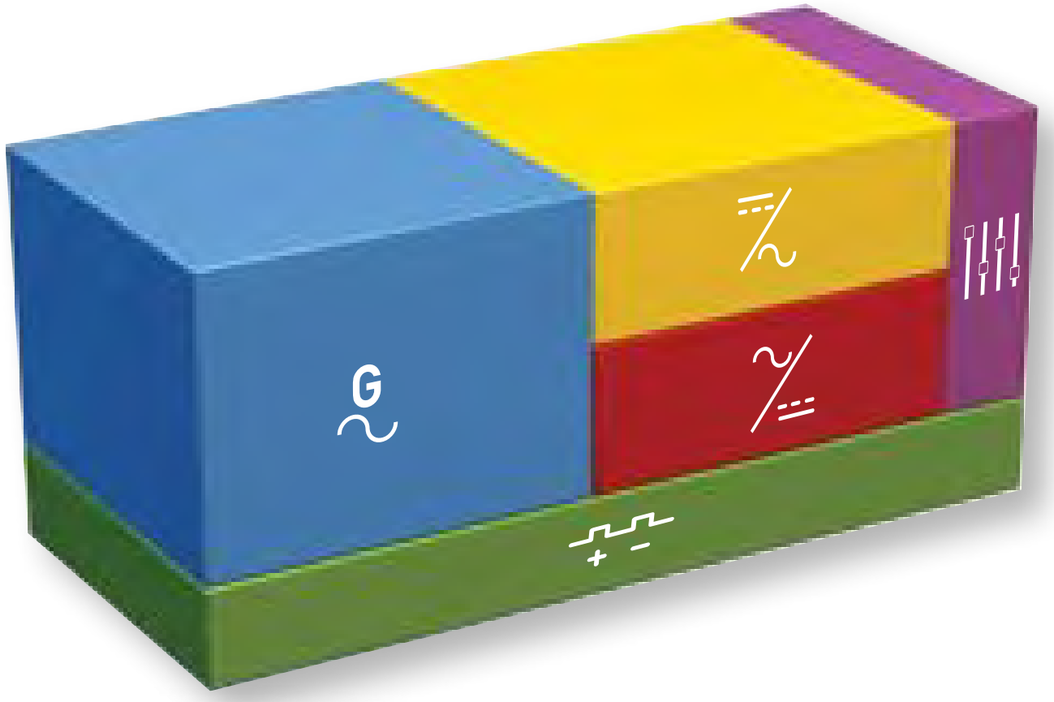

concept explained

All-in-one

HYBRID GENERATOR SYSTEM - GENVERTER SERIES

The WhisperPower W-GV 5i has been to designed to combine the following power system functions in one box: a diesel generator with Permanent Magnet fly wheel alternator, a sine wave inverter, a switch-mode high efficiency 3-stage battery charger, a land power connection and an AC power distribution device. At low power demand the W-GV 5i will switch to the 2 kW sine wave inverter (silent mode) and the diesel engine will be switched off. The unit has 24 V DC charging capabilities for the main service bank. The inverter operates bi-directionally and will charge the battery in case land power is available. At higher power demand the diesel generator will start automatically to re-charge the service battery and provide 230 V AC power to the various appliances. The diesel engine will rotate faster when more energy is required (max speed 3600 RPM) offering a maximum power of 4 kVA + 1 kVA provided by the battery and switches back to a low 2400 rpm when the demand is low. The system operates with any battery: wet lead-acid, AGM, GEL and Lithium-ION.

BUILDING BLOCKS OF THE GV SYSTEM

- I cylinder liquid cooled diesel engine with integrated permanent magnet fly wheel alternator.
- 230 V Sine Wave inverter supplies 2 kVA cont power at silent mode (4 kVA peak) and 5 kVA at generator mode.
- 3-stage switch-mode battery charger to charge the 24 V DC service bank.
- Transfer switch utility/land power - inverter - consumers.
- Option: Lithium-ION battery to be mounted under the GV 5i.

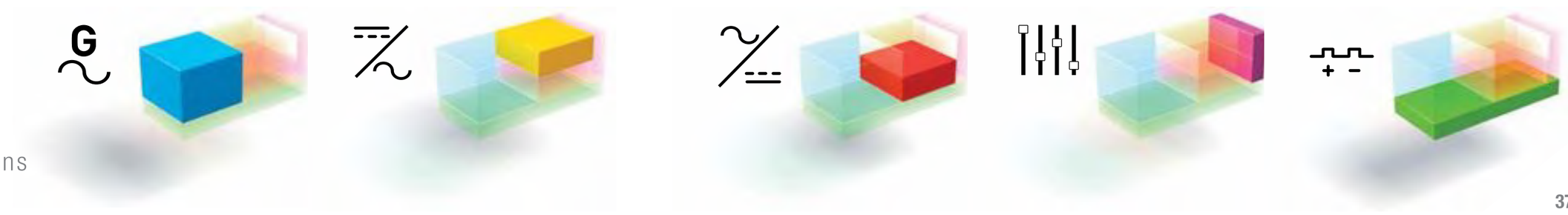

smart energy solutions

W-GV 4 Basic Genverter
Variable speed

W-GV 4 Basic, service side

DDC control panel 'Digital Diesel Control',
supplied as standard with all sets

Art. no.		
41002000	W-GV 4 Basic	available from Q4-2010

AC SYSTEM SPECIFICATIONS

System output continuous	3.8 kW at max rpm
Max output power	36 A
Output voltage / frequency	230 V / 50 Hz [1]
Harmonic distortion	< 5%

ALTERNATOR SPECIFCIATIONS

Type	Permanent Magnet Alternator (PM)
RPM range	2400-3600 rpm
Efficiency	94%

ENGINE SPECIFICATIONS

Engine	WhisperPower
Cylinder	1
Capacity	300 cc
Engine cooling	oil-cooled / oil cooler (internal)
Fuel consumption (no load - full load)	0.8 - 1.5 l/hr
Starting	electrical
Starter battery	12 V / 55 Ah

REMOTE CONTROL FOR GENVERTER BASIC GENERATOR

40209102	DDC panel: Digital Diesel Control, standard for every Whisper generator
40209102	Additional 2nd panel: DDC panel/slave version for second start/stop location
	See page 69 for optional displays, controls and pc-link

[1] 120 V / 60 Hz optional

DIMENSIONS & WEIGHT

Length:	630 mm
Width:	480 mm
Height:	520 mm
Dry weight:	92 kg
Dry exhaust pipe:	Ø 1 inch BSP thread

INSTALLATION DRAWING W-GV 4 BASIC

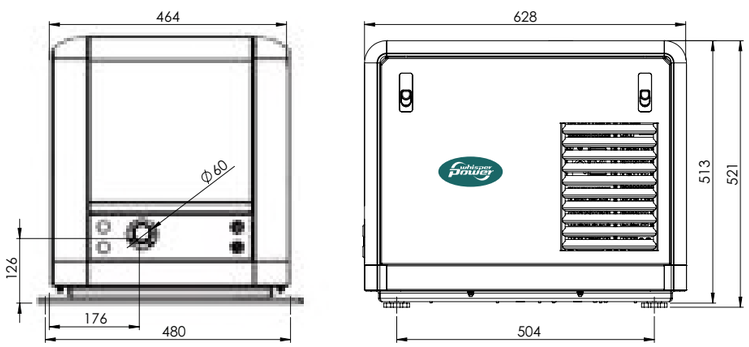

smart energy solutions

W-GV 4DC Genverter
DC generator

DC Generator / Battery charger

DDC control panel 'Digital Diesel Control',
supplied as standard with all sets

Art. no.		
41003000	W-GV 4DC	available from Q3-2011

DC SYSTEM SPECIFICATIONS

Battery voltage	24 VDC [1]
Battery Charging current	150 A (adjustable)
Charge characteristic	3-step, temp. compensated

ALTERNATOR SPECIFICATIONS

Type	Permanent Magnet Alternator (PM)
Continuous rated power 3000 rpm	3.3 kW
Efficiency	94%
RPM	variable

ENGINE SPECIFICATIONS

Engine	WhisperPower
Cylinder	1
Capacity	300 cc
Engine cooling	oil-cooled / oil cooler (internal)
Fuel consumption (no load - full load)	0.8 - 1.5 l/hr
Starting	electrical
Starter battery	12 V / 55 Ah

REMOTE CONTROL FOR GENVERTER GENERATOR

40209102	DDC panel: Digital Diesel Control, standard for every Whisper generator
40209102	Additional 2nd panel: DDC panel/slave version for second start/stop location
	See page 69 for optional displays, controls and pc-link

[1] 120 V / 60 Hz optional

DIMENSIONS & WEIGHT

Length:	630 mm
Width:	480 mm
Height:	520 mm
Dry weight:	80 kg
Dry exhaust pipe:	Ø 1 inch BSP thread

INSTALLATION DRAWING W-GV 4DC

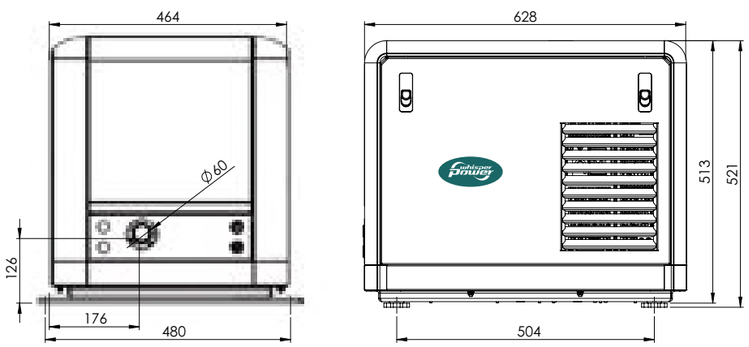

smart energy solutions

W-GV 5i Genverter

Hybrid generator variable speed

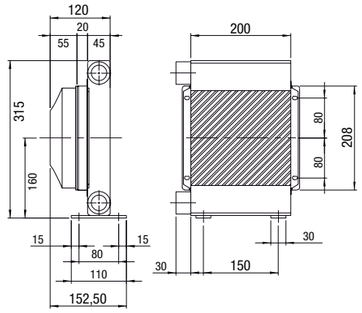

Art. no.		
41001000	W-GV 5i - 24 V DC	available from Q1-2011
41001500	W-GV 5i - 12 V DC	available from Q2-2011

AC SYSTEM SPECIFICATIONS

System output continuous	5 kW
Silent mode	2 kW (AC via battery)
Peak power (5 sec)	10 kW
Output voltage / frequency	230 V / 50 Hz [1])
Output voltage form	sinus
Parallel use (multiple systems)	yes
Parallel with land power / utility	yes (BOOST function)

DC SYSTEM SPECIFICATIONS

Battery voltage	24 VDC or 12 VDC [2])
Battery Charging current	100 A (24 V) / 150 A (12 V)
Charge characteristic	3-step, temp. compensated

ALTERNATOR SPECIFICATIONS

Type	Permanent Magnet Alternator (PM)
Continuous rated power 3000 rpm	3.0 kW without inverter
Peak power rated at 3600 rpm	5 kW with inverter
Efficiency	94%
RPM	2250 - 3600, variable

AUTOMATIC TRANSFER SYSTEM

Transfer time	10 - 20 ms
Max current	50 A

ENGINE SPECIFICATIONS

Engine	WhisperPower
Cylinder / Capacity	1 / 300 cc
Engine cooling	oil-cooled / oil cooler (external)
Fuel consumption (no load - full load)	0.8 - 1.5 l/hr
Starting	electrical

REMOTE CONTROL FOR WHISPER GENVERTER HYBRID

40209102 Panel/slave version for second start/stop location
Panel as shown at right supplied as standard.
See page 69 for optional displays, controls and pc-link

[1]) 120 V / 60 Hz optional [2]) Battery voltage 48 VDC optional

DIMENSIONS & WEIGHT

Length:	630 mm
Width:	480 mm
Height:	520 mm
Dry weight:	103 kg
Dry exhaust pipe:	Ø 1 inch BSP thread

INSTALLATION DRAWING W-GV 5i

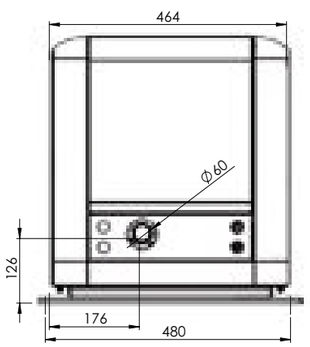

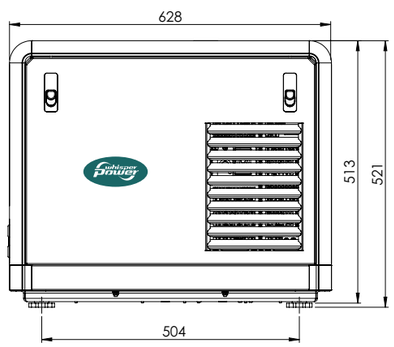

smart energy solutions

a close look inside Genverter

Permanent magnet alternator integrated with the fly wheel of the diesel engine, makes the system compact and highly efficient. (>94%)

Audible noise level < 52 dBA (in engine mode), noiseless in inverter/silent mode.

Sine wave inverter provides AC power from the 24 VDC battery (12 and 48 VDC coming up) Inverter Power rating 2 kW continuous, 10 kW peak.

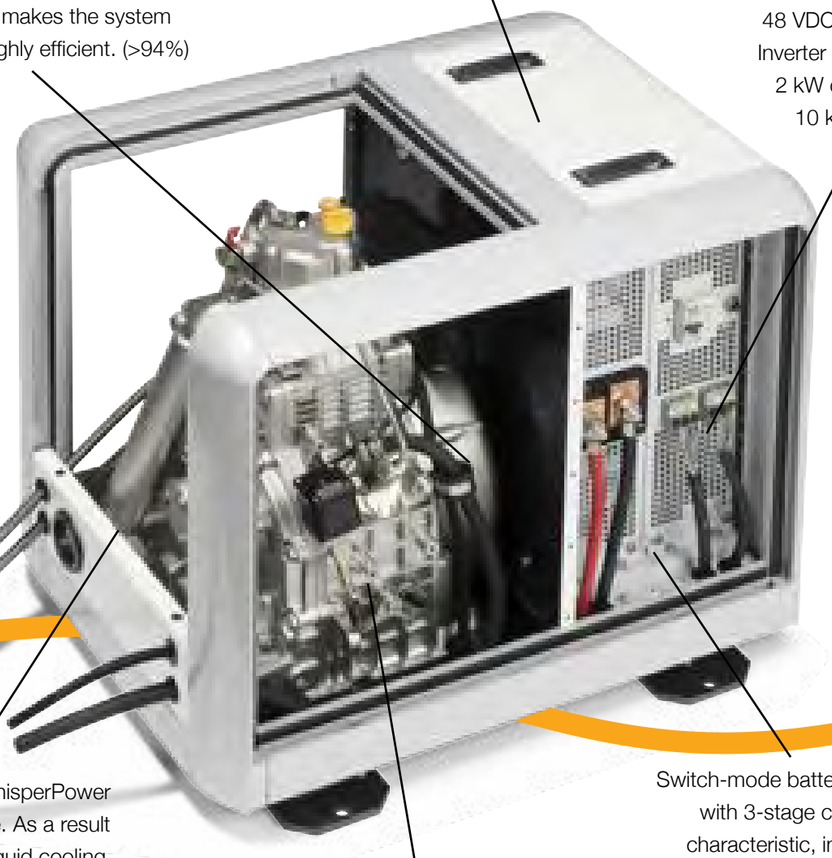

Pre-fab connections make installation easy (plug and play).

1 cylinder WhisperPower diesel engine. As a result of a smart liquid cooling concept reduction of noise level. External oil cooler/radiator with fan supplied as a kit.

Intellligent power management system controls the engine speed: at high power demand higher rotations per minute, at low demand lower rotation speed.

Switch-mode battery charger with 3-stage charge characteristic, includes temperature sensor, to charge all kinds of batteries (AGM/GEL/open lead-acid etc.) in a: diesel generator mode or b: when land power is available (180-260 VAC).

W-BD 3.5/5
Belt Power
230 VAC generator system

Impression of the final Belt Driven Generator

Remote panel for Belt Power,
with various settings

Art. no.		
41301000	W-BD 3.5 [1])	
41302000	W-BD 5 [1])	
SPECIFICATIONS		W-BD 3.5 / W-BD 5
	Power (continuous)	3500 W / 5000 W
	Max current (continuously)	16 A / 27 A
	Max. inrush current (320 ms)	32 A / 40 A
	Voltage	230 V / 230 V
	Frequency	50 Hz / 50 Hz
INVERTER BOX		
	Dimensions (h x w x d)	376 x 323 x 127 mm (app.)
	Net weight	9.6 kg
	Efficiency	95 %
GENERATOR		
	Net weight	6.9 kg
	Dimensions (h x w x d)	159 x 178 x 190 mm
	Voltage	200-340 V 3 phase
	Field voltage	14.4 V
REMOTE CONTROL PANEL		
41301030	Dimensions (h x w x d)	116 x 79 x 19 mm
ACCESSORIES		
41301020	Shielded power supply cable*	5 m
41301021	Shielded power supply cable*	8 m
41301022	Shielded power supply cable*	10 m
	Shieldedl cable	per metre
41301025	Cable remote control panel	5 m
41301026	Cable remote control panel	10 m
50209133	Cable remote control panel	15 m

STANDARD SUPPLY

Generator + Inverter Box + Special cable* + installation materials + Manuals

OPTIONAL

Remote Control Panel** + cable

* When ordering always order the selected special cable between Inverter Box and Generator as well! Length to be selected.
**All control and monitoring functions are available from both the Inverter Box and the Remote Control Panel.
[1]) Also suitable for Marine applications

INSTALLATION DRAWING W-BD GENERATOR

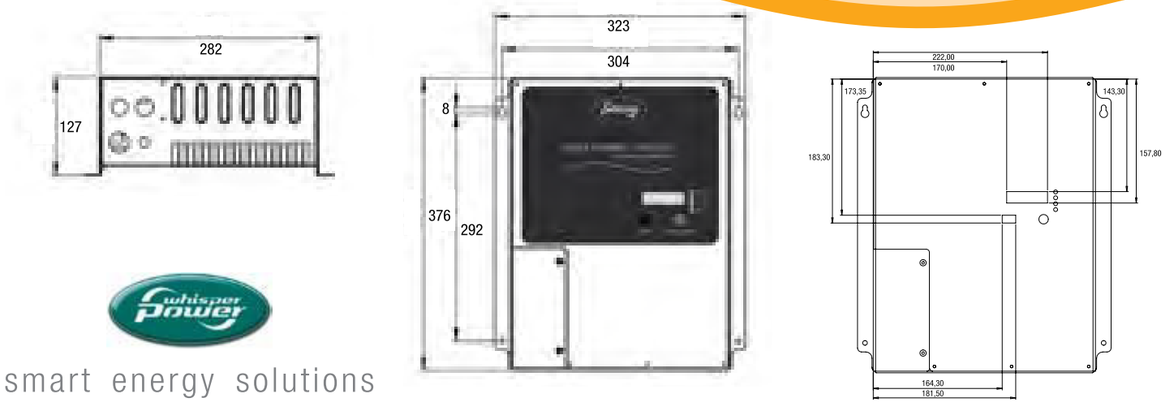

smart energy solutions

W-BD 3.5/5
Belt Power
230 VAC generator system

Art. no.		
STANDARD PULLEYS AND PULLEYS TO CLIENT SPECIFICATION		
	Depending on the vehicle model, mounting brackets to mount the generator on the engine could be available or can be specially designed	
41301050	Pulley poly 6 groove	Ø 60 mm (recommended)
41301051	Pulley poly 6 groove	Ø 50 mm
41301052	Pulley double V groove 12.7 mm	Ø 70 mm
41301053	Pulley double V groove 10 mm	Ø 60 mm

SAFETY ALARMS

Short circuit, overload, over temperature, low/high rpm, low/high voltage

DETERMINE THE PULLEY DIAMETER DESIGN

The graphs show the available AC power corresponding to the generator speed. The speed of 2 pulleys relate to each other proportional to the diameter of the pulleys.
First one need to know the engine speed = crankshaft speed when idling and at full speed. When the drive pulley is not on the crankshaft the rpm of the pulley drive shaft must be determined.
The pulleys should be selected in such a way that at low speed the generator can bring the power required.
However the max. speed must not exceed 15000 RPM.

ATTENTION!

The W-BD5 model needs 6500 RPM to generate 5 kW. Compared with the W-BD 3.5 the 5 kW model will also need more RPM (3200) to generate 1 kW. Refer to the graph.

Pulley

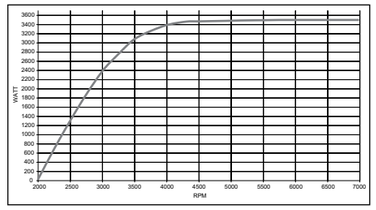

Speed/power diagram W-BD 3.5 (3.5 kW)

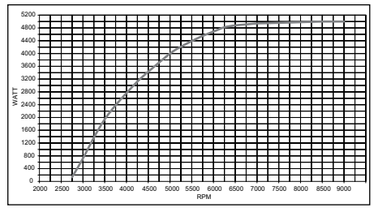

Speed/power diagram W-BD 5 (5 kW)

INSTALLATION DRAWING REMOTE CONTROL PANEL

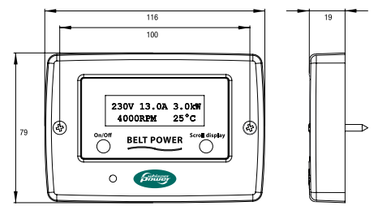

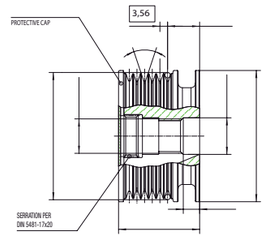

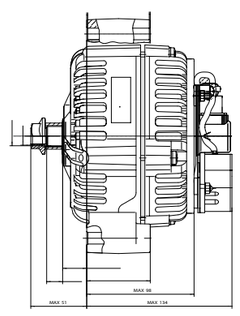

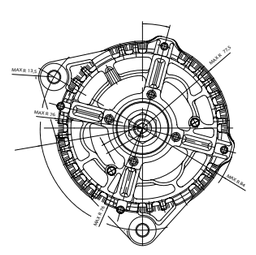

smart energy solutions

W-SC 3
Diesel generator
3.000 RPM
Super Compact series

DDC control panel 'Digital Diesel Control',
supplied as standard with all sets

Art. no.		
41200520	W-SC 3.5 230 V / 50 Hz	

MAIN SPECIFICATIONS

Nominal power [2]	2.5 kW at 3.000 RPM
Nominal voltage [3]	230 V - 11 A
Output frequency	50 Hz
Power factor / cos phi	1
Voltage tolerance	± 7%
Frequency tolerance (Hz)	± 5%
Voltage regulation	capacitor
Starter battery	12 V
Battery charge current	auxiliary winding 4 A
Alternator	water-cooled, no brushes, synchronous
Sound level [4]	58 dBA

SPECIFICATIONS DIESEL ENGINE

Engine model	OC60
Number of cylinders	1
Cylinder capacity	276 cc
Bore & stroke	72 x 68 mm
Air consumption	0.38 m³/min
Engine cooling	oil-cooled
Fuel consumption (no load - full load)	0.7-1.2 l/hour

REMOTE CONTROL FOR WHISPER GENERATOR

40209102	DDC panel: Digital Diesel Control, standard for every Whisper generator
40209102	Additional 2nd panel: DDC panel/slave version for second start/stop location
	See page 69 for optional displays, controls and pc-link

ACCESSORIES & OPTIONS

40201321	Radiator cooling kit engine/alternator	
40201320	Dry exhaust kit 1"	See page 57
40230205	Fuel kit	See page 21

[2] peak power 200% [3] 120 V / 50 or 60 Hz available as well [4] at 7 mtrs

DIMENSIONS & WEIGHT

Length:	505 mm
Width:	400 mm
Height:	500 mm
Dry weight:	97 kg
Dry exhaust pipe:	Ø 1 inch BSP
Location oil refill cap:	top & side
Max. operating angle:	25° in all directions

INSTALLATION DRAWING W-SC 3

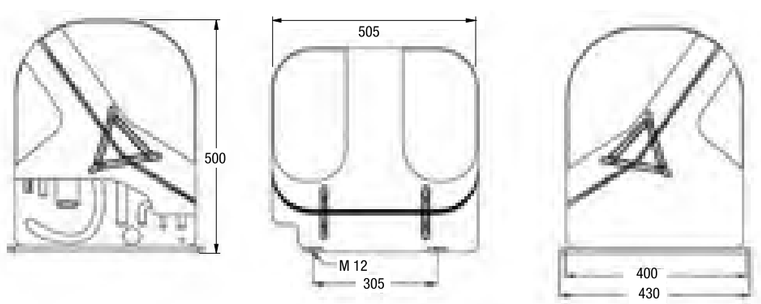

smart energy solutions

W-SC 6
Diesel generator
3.000 RPM
Super Compact series

DDC control panel 'Digital Diesel Control',
supplied as standard with all sets

Art. no.		
41102020	W-SC 6 230 V / 50 Hz	

MAIN SPECIFICATIONS

Nominal power [2]	5 kW at 3.000 RPM
Nominal voltage [3]	230 V - 22 A
Output frequency	50 Hz
Power factor / cos phi	1
Voltage tolerance [4]	± 5%
Frequency tolerance (Hz) [4]	± 1%
Voltage regulation	capacitor
Starter battery	12 V
Battery charge current	alternator 40 A
Alternator	water-cooled, no brushes, synchronous
Sound level [5]	56 dBA

SPECIFICATIONS DIESEL ENGINE

Engine model	L2E
Number of cylinders	2
Cylinder capacity	635 cc
Bore & stroke	2 x 76 x 70 mm
Air consumption	0.95 m³/min
Engine cooling	water-cooled
Fuel consumption (no load - full load)	1-2.5 l/hour

REMOTE CONTROL FOR WHISPER GENERATOR

40209102	DDC panel: Digital Diesel Control, standard for every Whisper generator
40209102	Additional 2nd panel: DDC panel/slave version for second start/stop location
	See page 69 for optional displays, controls and pc-link

ACCESSORIES & OPTIONS

40230626	TOP-COOL radiator	See page 56
40201879	Radiator cooling kit engine	See page 55
40201878	Radiator cooling kit alternator	See page 55
40201882	Fan control kit	
40230610	Waterhush exhaust system	See page 57
40201320	Dry exhaust kit	See page 57
40230205	Fuel kit	See page 21

[2] peak power 200% [3] 120 V / 50 or 60 Hz available as well [4] controlled by electronic governor [5] at 7 mtrs

DIMENSIONS & WEIGHT

Length:	690 mm
Width:	525 mm
Height:	580 mm
Dry weight:	184 kg
Dry exhaust pipe:	Ø 1 inch BSP
Location oil refill cap:	top & side
Max. operating angle:	25° in all directions

INSTALLATION DRAWING W-SC 6

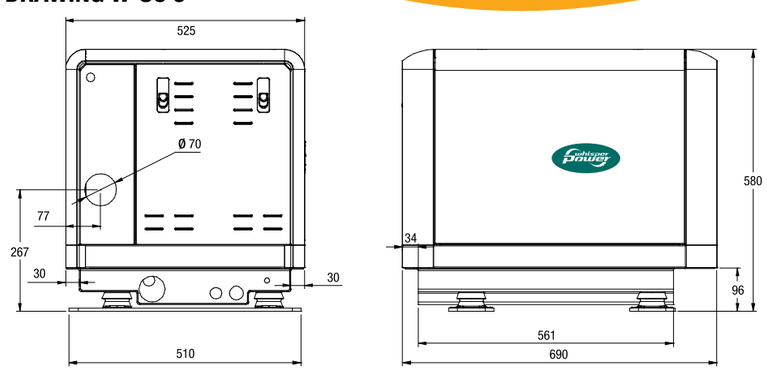

smart energy solutions

W-SC 10
Diesel generator
3.000 RPM
Super Compact series

DDC control panel 'Digital Diesel Control',
supplied as standard with all sets

Art. no.		
41104020	W-SC 10 230 V / 50 Hz	

MAIN SPECIFICATIONS

	Nominal power [2]	9 kW at 3.000 RPM
	Nominal voltage [3]	230 V - 39 A
	Output frequency	50 Hz
	Power factor / cos phi	1
	Voltage tolerance [4]	± 5%
	Frequency tolerance (Hz) [4]	± 1%
	Voltage regulation	capacitor
	Starter battery	12 V
	Battery charge current	alternator 40 A
	Alternator	water-cooled, no brushes, synchronous
	Sound level [5]	59 dBA

SPECIFICATIONS DIESEL ENGINE

	Engine model	L3E
	Number of cylinders	3
	Cylinder capacity	952 cc
	Bore & stroke	3 x 76 x 70 mm
	Air consumption	1.43 m³/min
	Engine cooling	water-cooled
	Fuel consumption (no load - full load)	1-4 l/hour

REMOTE CONTROL FOR WHISPER GENERATOR

40209102	DDC panel: Digital Diesel Control, standard for every Whisper generator
40209102	Additional 2nd panel: DDC panel/slave version for second start/stop location
	See page 69 for optional displays, controls and pc-link

ACCESSORIES & OPTIONS

40230627	TOP-COOL radiator	See page 56
40201877	Radiator cooling kit engine	See page 55
40201878	Radiator cooling kit alternator	See page 55
40201882	Fan control kit	
40230610	Waterhush exhaust system	See page 57
40201375	Dry exhaust kit	See page 57
40230205	Fuel kit	See page 21

[2] peak power 200% [3] 120 V / 50 or 60 Hz available as well [4] controlled by electronic governor [5] at 7 mtrs

DIMENSIONS & WEIGHT

Length:	805 mm
Width:	525 mm
Height:	580 mm
Dry weight:	215 kg
Dry exhaust pipe:	Ø 1.5 inch BSP
Location oil refill cap:	top & side
Max. operating angle:	25º in all directions

smart energy solutions

INSTALLATION DRAWING W-SC 10

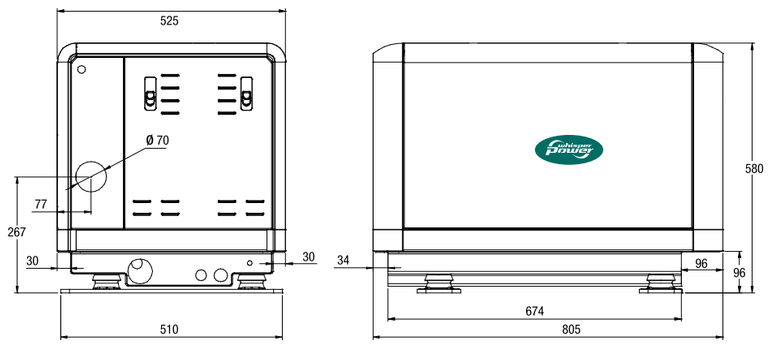

W-SC 15
Diesel generator
3.000 RPM
Super Compact series

DDC control panel 'Digital Diesel Control',
supplied as standard with all sets

Art. no.		availeble from Q2-2011
41306020	W-SC 15 230 V / 50 Hz	

MAIN SPECIFICATIONS

	Nominal power [2]	15 kW at 3.000 RPM
	Nominal voltage [3]	230 V - 65 A
	Output frequency	50 Hz
	Power factor / cos phi	1
	Voltage tolerance [4]	± 2%
	Frequency tolerance (Hz) [4]	± 1%
	Voltage regulation	capacitor
	Starter battery	12 V
	Battery charge current	alternator 50 A
	Alternator	air-cooled, no brushes, synchronous
	Sound level [5]	61 dBA

SPECIFICATIONS DIESEL ENGINE

	Engine model	S3L2
	Number of cylinders	3
	Cylinder capacity	1318 cc
	Bore & stroke	3 x 78 x 92 mm
	Air consumption	2.2 m³/min
	Engine cooling	water-cooled
	Fuel consumption (no load - full load)	1-5 l/hour

REMOTE CONTROL FOR WHISPER GENERATOR

40209102	DDC panel: Digital Diesel Control, standard for every Whisper generator
40209102	Additional 2nd panel: DDC panel/slave version for second start/stop location
	See page 69 for optional displays, controls and pc-link

ACCESSORIES & OPTIONS

	3-phase 3 x 230/400 VAC output	Optional
	Power take off for hydraulics (p.t.o.)	Optional
40230631	TOP-COOL radiator	See page 56
40201877	Radiator cooling kit engine	See page 55
40201882	Fan control kit	
40230611	Waterhush exhaust system	See page 57
40201875	Dry exhaust kit	See page 57
40230205	Fuel kit	See page 21

[2] peak power 200% [3] 120 V / 50 or 60 Hz available as well [4] controlled by electronic governor [5] at 7 mtrs

DIMENSIONS & WEIGHT

Length:	950 mm
Width:	575 mm
Height:	640 mm
Dry weight:	334 kg
Dry exhaust pipe:	Ø 1.5 inch BSP
Location oil refill cap:	top & side
Max. operating angle:	25º in all directions

smart energy solutions

INSTALLATION DRAWING W-SC 15

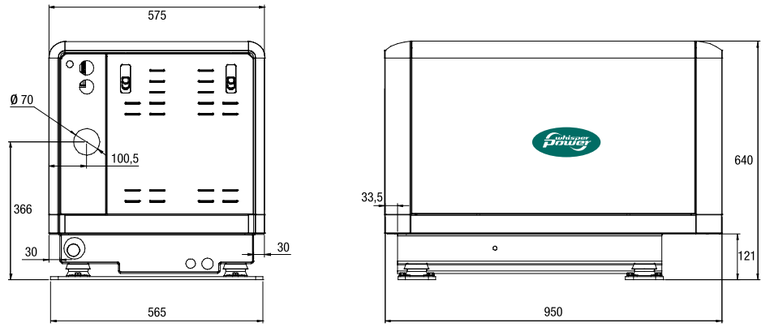

W-SC 20
Diesel generator
3.000 RPM
Super Compact series

DDC control panel 'Digital Diesel Control',
supplied as standard with all sets

Art. no.		
41307020	W-SC 20 230 V / 50 Hz	available from Q2-2011

MAIN SPECIFICATIONS

Nominal power [2]	20 kW at 3.000 RPM
Nominal voltage [3]	230 V - 86 A
Output frequency	50 Hz
Power factor / cos phi	1
Voltage tolerance [4]	± 2%
Frequency tolerance (Hz) [4]	± 1%
Voltage regulation	AVR
Starter battery	12 V
Battery charge current	alternator 50 A
Alternator	air-cooled, no brushes, synchronous
Sound level [5]	62 dBA

SPECIFICATIONS DIESEL ENGINE

Engine model	S4L2
Number of cylinders	4
Cylinder capacity	1758 cc
Bore & stroke	4 x 78 x 92 mm
Air consumption	3 m³/min
Engine cooling	water-cooled
Fuel consumption (no load - full load)	1-6 l/hour

REMOTE CONTROL FOR WHISPER GENERATOR

40209102	DDC panel: Digital Diesel Control, standard for every Whisper generator
40209102	Additional 2nd panel: DDC panel/slave version for second start/stop location
	See page 69 for optional displays, controls and pc-link

ACCESSORIES & OPTIONS

	3-phase 3 x 230/400 VAC output	Optional
	Power take off for hydraulics (p.t.o.)	Optional
40230632	TOP-COOL radiator	See page 56
40201877	Radiator cooling kit engine	See page 55
40201882	Fan control kit	
40230611	Waterhush exhaust system	See page 57
40201875	Dry exhaust kit	See page 57
40230205	Fuel kit	See page 21

[2] peak power 200% [3] 120 V / 50 or 60 Hz available as well [4] controlled by electronic governor [5] at 7 mtrs

DIMENSIONS & WEIGHT

Length:	1060 mm
Width:	575 mm
Height:	640 mm
Dry weight:	380 kg
Dry exhaust pipe:	Ø 1.5 inch BSP
Location oil refill cap:	top & side
Max. operating angle:	25° in all directions

INSTALLATION DRAWING W-SC 20

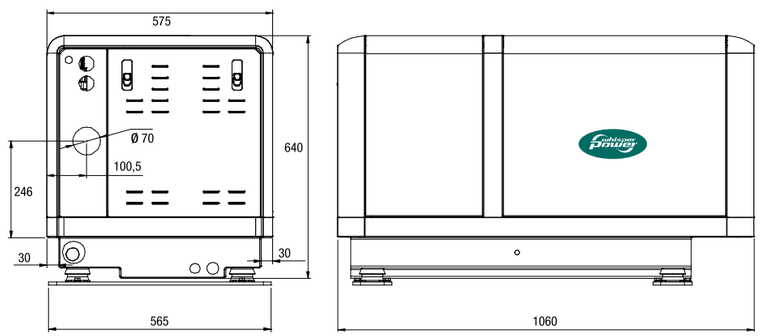

smart energy solutions

W-SQ 6
Diesel generator
1.500 RPM
Super Quiet series

DDC control panel 'Digital Diesel Control',
supplied as standard with all sets

Art. no.		
41105020	W-SQ 6 230 V / 50 Hz	

MAIN SPECIFICATIONS

Nominal power [2]	5 kW at 1.500 RPM
Nominal voltage [3]	230 V - 22 A
Output frequency	50 Hz
Power factor / cos phi	1
Voltage tolerance [4]	± 5%
Frequency tolerance (Hz) [4]	± 1%
Voltage regulation	capacitor
Starter battery	12 V
Battery charge current	alternator 40 A
Alternator	water-cooled, no brushes, synchronous
Sound level [5]	51 dBA

SPECIFICATIONS DIESEL ENGINE

Engine model	L3E
Number of cylinders	3
Cylinder capacity	952 cc
Bore & stroke	3 x 76 x 70 mm
Air consumption	0.8 m³/min
Engine cooling	water-cooled
Fuel consumption (no load - full load)	1-3 l/hour

REMOTE CONTROL FOR WHISPER GENERATOR

40209102	DDC panel: Digital Diesel Control, standard for every Whisper generator
40209102	Additional 2nd panel: DDC panel/slave version for second start/stop location
	See page 69 for optional displays, controls and pc-link

ACCESSORIES & OPTIONS

40230626	TOP-COOL radiator	See page 56
40201879	Radiator cooling kit engine	See page 55
40201878	Radiator cooling kit alternator	See page 55
40201882	Fan control kit	
40230610	Waterhush exhaust system	See page 57
40201875	Dry exhaust kit	See page 57
40230205	Fuel kit	See page 21

[2] peak power 200% [3] 120 V / 50 or 60 Hz available as well [4] controlled by electronic governor [5] at 7 mtrs

DIMENSIONS & WEIGHT

Length:	805 mm
Width:	525 mm
Height:	580 mm
Dry weight:	240 kg
Dry exhaust pipe:	Ø 1.5 inch BSP
Location oil refill cap:	top & side
Max. operating angle:	25° in all directions

INSTALLATION DRAWING W-SQ 6

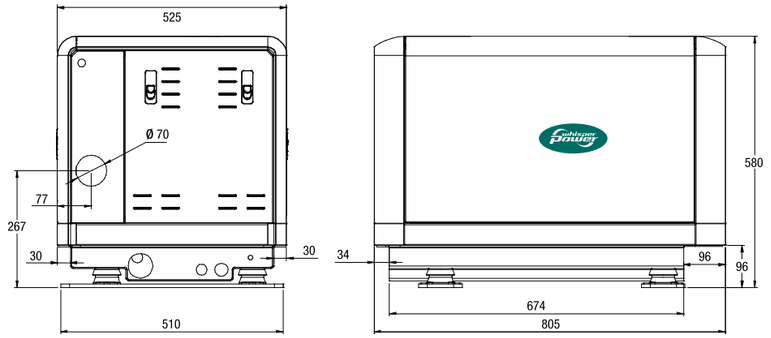

smart energy solutions

W-SQ 8
Diesel generator
1.500 RPM
Super Quiet series

DDC control panel 'Digital Diesel Control',
supplied as standard with all sets

Art. no.		
41106020	W-SQ 8 230 V / 50 Hz	

MAIN SPECIFICATIONS

	Nominal power [2]	8 kW at 1.500 RPM
	Nominal voltage [3]	230 V - 35 A
	Output frequency	50 Hz
	Power factor / cos phi	1
	Voltage tolerance [4]	± 5%
	Frequency tolerance (Hz) [4]	± 1%
	Voltage regulation	capacitor
	Starter battery	12 V
	Battery charge current	alternator 50 A
	Alternator	water-cooled, no brushes, synchronous
	Sound level [5]	54 dBA

SPECIFICATIONS DIESEL ENGINE

	Engine model	S3L2
	Number of cylinders	3
	Cylinder capacity	1318 cc
	Bore & stroke	3 x 78 x 92 mm
	Air consumption	1.1 m³/min
	Engine cooling	water-cooled
	Fuel consumption (no load - full load)	1-3 l/hour

REMOTE CONTROL FOR WHISPER GENERATOR

40209102	DDC panel: Digital Diesel Control, standard for every Whisper generator	
40209102	Additional 2nd panel: DDC panel/slave version for second start/stop location	
	See page 69 for optional displays, controls and pc-link	

ACCESSORIES & OPTIONS

	3-phase 3 x 230/400 VAC output	Optional
	Power take off for hydraulics (p.t.o.)	Optional
40230628	TOP-COOL radiator	See page 56
40201864	Radiator cooling kit engine	See page 55
40201878	Radiator cooling kit alternator	See page 55
40201882	Fan control kit	
40230611	Waterhush exhaust system	See page 57
40201875	Dry exhaust kit	See page 57
40230205	Fuel kit	See page 21

[2] peak power 200% [3] 120 V / 50 or 60 Hz available as well [4] controlled by electronic governor [5] at 7 mtrs

DIMENSIONS & WEIGHT

Length:	900 mm
Width:	575 mm
Height:	640 mm
Dry weight:	334 kg
Dry exhaust pipe:	Ø 1.5 inch BSP
Location oil refill cap:	top & side
Max. operating angle:	25° in all directions

smart energy solutions

INSTALLATION DRAWING W-SQ 8

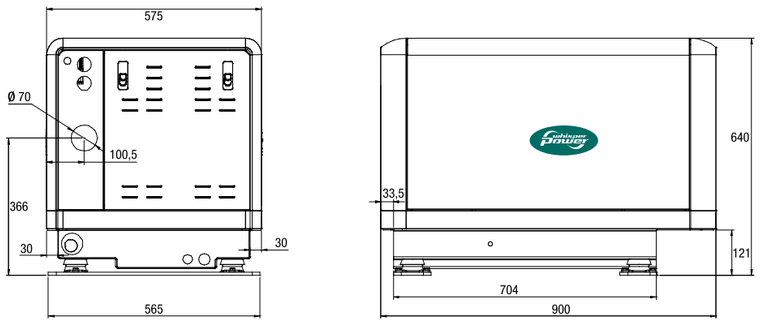

W-SQ 12
Diesel generator
1.500 RPM
Super Quiet series

DDC control panel 'Digital Diesel Control',
supplied as standard with all sets

Art. no.		
41107020	W-SQ 12 230 V / 50 Hz	

MAIN SPECIFICATIONS

	Nominal power [2]	12 kW at 1.500 RPM
	Nominal voltage [3]	230 V - 52 A
	Output frequency	50 Hz
	Power factor / cos phi	1
	Voltage tolerance [4]	± 5%
	Frequency tolerance (Hz) [4]	± 1%
	Voltage regulation	capacitor
	Starter battery	12 V
	Battery charge current	alternator 50 A
	Alternator	water-cooled, no brushes, synchronous
	Sound level [5]	55 dBA

SPECIFICATIONS DIESEL ENGINE

	Engine model	S4L2
	Number of cylinders	4
	Cylinder capacity	1758 cc
	Bore & stroke	4 x 78 x 92 mm
	Air consumption	1.5 m³/min
	Engine cooling	water-cooled
	Fuel consumption (no load - full load)	1-4 l/hour

REMOTE CONTROL FOR WHISPER GENERATOR

40209102	DDC panel: Digital Diesel Control, standard for every Whisper generator	
40209102	Additional 2nd panel: DDC panel/slave version for second start/stop location	
	See page 69 for optional displays, controls and pc-link	

ACCESSORIES & OPTIONS

	3-phase 3 x 230/400 VAC output	Optional
	Power take off for hydraulics (p.t.o.)	Optional
40230629	TOP-COOL radiator	See page 56
40201877	Radiator cooling kit engine	See page 55
40201878	Radiator cooling kit alternator	See page 55
40201882	Fan control kit	
40230611	Waterhush exhaust system	See page 57
40201875	Dry exhaust kit	See page 57
40230205	Fuel kit	See page 21

[2] peak power 200% [3] 120 V / 50 or 60 Hz available as well [4] controlled by electronic governor [5] at 7 mtrs

DIMENSIONS & WEIGHT

Length:	1060 mm
Width:	575 mm
Height:	640 mm
Dry weight:	380 kg
Dry exhaust pipe:	Ø 1.5 inch BSP
Location oil refill cap:	top & side
Max. operating angle:	25° in all directions

smart energy solutions

INSTALLATION DRAWING W-SQ 12

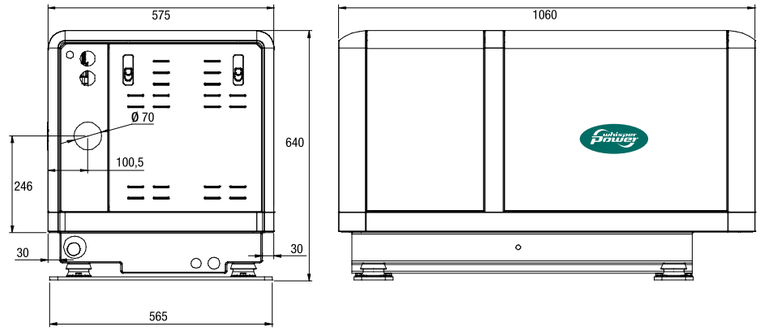

W-SQ 16
Diesel generator
1.500 RPM
Super Quiet series

DDC control panel 'Digital Diesel Control',
supplied as standard with all sets

Art. no.

41108020 W-SQ 16 230 V / 50 Hz

MAIN SPECIFICATIONS

Nominal power [2]	12 kW at 1.500 RPM
Nominal voltage [3]	230 V - 52 A
Output frequency	50 Hz
Power factor / cos phi	1
Voltage tolerance [4]	± 5%
Frequency tolerance (Hz) [4]	± 1%
Voltage regulation	capacitor
Starter battery	12 V
Battery charge current	alternator 50 A
Alternator	water-cooled, no brushes, synchronous
Sound level [5]	56 dBA

SPECIFICATIONS DIESEL ENGINE

Engine model	S4L2
Number of cylinders	4
Cylinder capacity	1758 cc
Bore & stroke	4 x 78 x 92 mm
Air consumption	1.5 m³/min
Engine cooling	water-cooled
Fuel consumption (no load - full load)	1-5 l/hour

REMOTE CONTROL FOR WHISPER GENERATOR

40209102	DDC panel: Digital Diesel Control, standard for every Whisper generator
40209102	Additional 2nd panel: DDC panel/slave version for second start/stop location
	See page 69 for optional displays, controls and pc-link

ACCESSORIES & OPTIONS

	3-phase 3 x 230/400 VAC output	Optional
	Power take off for hydraulics (p.t.o.)	Optional
40230629	TOP-COOL radiator	See page 56
40201877	Radiator cooling kit engine	See page 55
40201878	Radiator cooling kit alternator	See page 55
40201882	Fan control kit	
40230611	Waterhush exhaust system	See page 57
40201875	Dry exhaust kit	See page 57
40230205	Fuel kit	See page 21

[2] peak power 200% [3] 120 V / 50 or 60 Hz available as well [4] controlled by electronic governor [5] at 7 mtrs

DIMENSIONS & WEIGHT

Length:	1160 mm
Width:	680 mm
Height:	700 mm
Dry weight:	454 kg
Dry exhaust pipe:	Ø 1.5 inch BSP
Location oil refill cap:	top
Max. operating angle:	25º in all directions

smart energy solutions

INSTALLATION DRAWING W-SQ 16

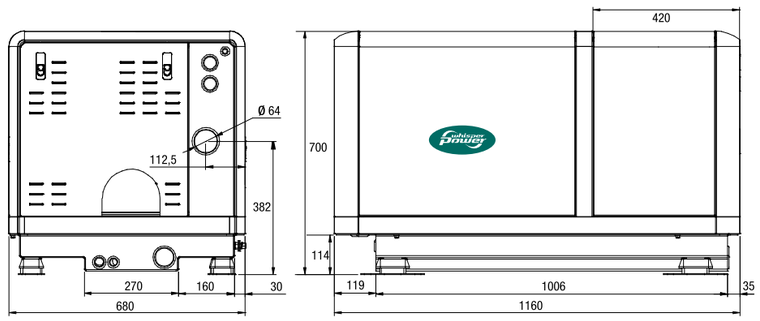

W-SQ 20
Diesel generator
1.500 RPM
Super Quiet series

DDC control panel 'Digital Diesel Control',
supplied as standard with all sets

Art. no.

41101220 W-SQ 20 230 V / 50 Hz

MAIN SPECIFICATIONS

Nominal power [2]	20 kW at 1.500 RPM
Nominal voltage [3]	230 V - 87 A
Output frequency	50 Hz
Power factor / cos phi	1
Voltage tolerance	± 2%
Frequency tolerance (Hz)	± 3%
Voltage regulation	AVR
Starter battery	12 V
Battery charge current	alternator 50 A
Alternator	air-cooled, no brushes, synchronous
Sound level [4]	58 dBA

SPECIFICATIONS DIESEL ENGINE

Engine model	S4S
Number of cylinders	4
Cylinder capacity	3331 cc
Bore & stroke	4 x 94 x 120 mm
Air consumption	2.8 m³/min
Engine cooling	water-cooled
Fuel consumption (no load - full load)	1-6 l/hour

REMOTE CONTROL FOR WHISPER GENERATOR

40209102	DDC panel: Digital Diesel Control, standard for every Whisper generator
40209102	Additional 2nd panel: DDC panel/slave version for second start/stop location
	See page 69 for optional displays, controls and pc-link

ACCESSORIES & OPTIONS

	3-phase 3 x 400 VAC output	Optional
	Power take off for hydraulics (p.t.o.)	Optional
40230632	TOP-COOL radiator	See page 56
40201897	Radiator cooling kit engine	See page 55
40201889	Dry exhaust kit	See page 55
40230205	Fuel kit	See page 21

[2] peak power 200% [3] 120 V / 50 or 60 Hz available as well [4] at 7 mtrs

DIMENSIONS & WEIGHT

Length:	1260 mm
Width:	680 mm
Height:	800 mm
Dry weight:	580 kg
Dry exhaust pipe:	Ø 2 inch BSP
Location oil refill cap:	top
Max. operating angle:	25º in all directions

smart energy solutions

INSTALLATION DRAWING W-SQ 20

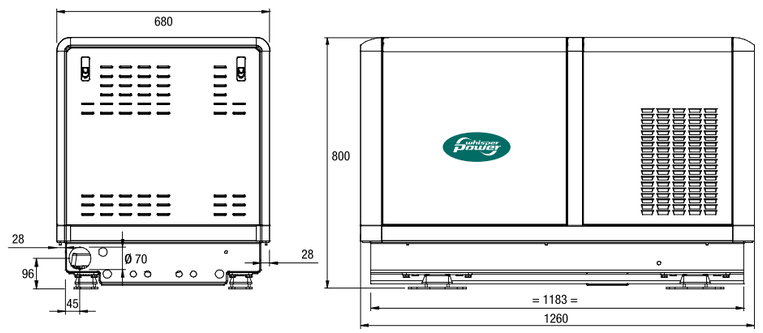

W-SQ 25
Diesel generator
1.500 RPM
Super Quiet series

DDC control panel 'Digital Diesel Control', supplied as standard with all sets

Art. no.

41101020 W-SQ 25 230 V / 50 Hz

MAIN SPECIFICATIONS

Nominal power 2)	25 kW at 1.500 RPM
Nominal voltage 3)	230 V - 108 A
Output frequency	50 Hz
Power factor / cos phi	1
Voltage tolerance	± 2%
Frequency tolerance (Hz)	± 3%
Voltage regulation	AVR
Starter battery	12 V
Battery charge current	alternator 50 A
Alternator	air-cooled, no brushes, synchronous
Sound level 4)	58 dBA

SPECIFICATIONS DIESEL ENGINE

Engine model	S4S
Number of cylinders	4
Cylinder capacity	3331 cc
Bore & stroke	4 x 94 x 120 mm
Air consumption	2.8 m³/min
Engine cooling	water-cooled
Fuel consumption (no load - full load)	1-8 l/hour

REMOTE CONTROL FOR WHISPER GENERATOR

40209102	DDC panel: Digital Diesel Control, standard for every Whisper generator
40209102	Additional 2nd panel: DDC panel/slave version for second start/stop location
	See page 69 for optional displays, controls and pc-link

ACCESSORIES & OPTIONS

	3-phase 3 x 230/400 VAC output	Optional
	Power take off for hydraulics (p.t.o.)	Optional
40230632	TOP-COOL radiator	See page 56
40201897	Radiator cooling kit engine	See page 55
40201889	Dry exhaust kit	See page 55
40230205	Fuel kit	See page 21

2) peak power 200% 3) 120 V / 50 or 60 Hz available as well 4) at 7 mtrs

DIMENSIONS & WEIGHT

Length:	1260 mm
Width:	680 mm
Height:	800 mm
Dry weight:	580 kg
Dry exhaust pipe:	Ø 2 inch BSP
Location oil refill cap:	top
Max. operating angle:	25° in all directions

INSTALLATION DRAWING W-SQ 25

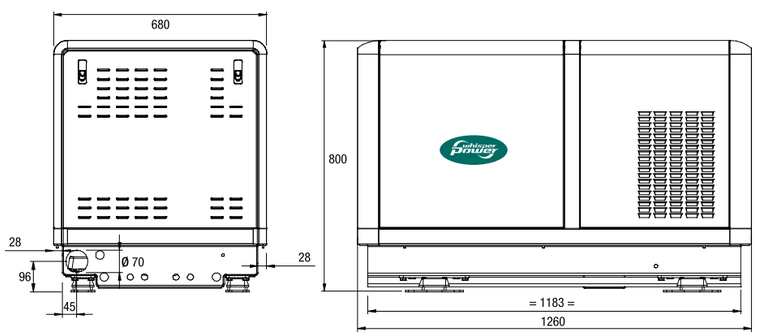

smart energy solutions

Radiator
Cooling kits

Radiator Cooling kit

Art. no.

RADIATOR COOLING KITS - SIDE COOLING

40201878	Radiator cooling kit alternator for	W-SC 6, W-SC 10 W-SQ 6, W-SQ 8, W-SQ 12	(drawing A)
40201888	Radiator cooling kit alternator for	W-SQ 16	(drawing B)
40201879	Radiator cooling kit engine for	W-SC 6 and W-SQ 6	(drawing A)
40201864	Radiator cooling kit engine for	W-SC 10 and W-SQ 8	(drawing B)
40201877	Radiator cooling kit engine for	W-SQ 12 and W-SQ 16	(drawing C)
40201897	Radiator cooling kit engine for (no radiator needed for the alternator)	W-SQ 20 and W-SQ 25	(drawing D)

As an alternative of the TOP-COOL radiator system two separate radiator cooling kits for the diesel engine and the AC alternator can be installed.

INSTALLATION EXAMPLE

INSTALLATION DRAWINGS RADIATOR COOLING KITS

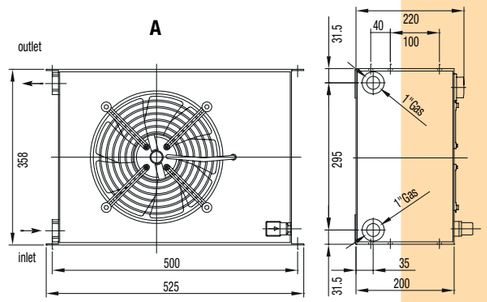

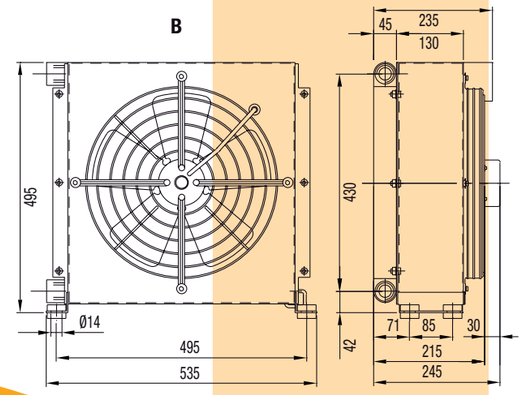

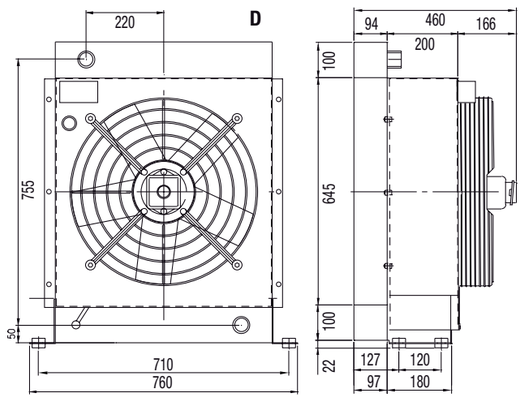

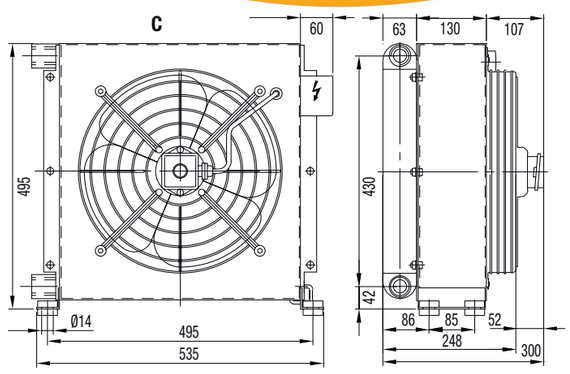

TOP-COOL Radiator system

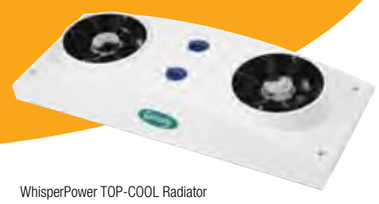

WhisperPower TOP-COOL Radiator

Art. no.

WHISPERPOWER TOP-COOL RADIATOR SYSTEM

This integrated roof mounted system is holding two radiators for cooling the WhisperPower generator. One radiator for the diesel engine and the other radiator is used for the cooling of the AC alternator.

The two expansion tanks are integrated in the system.
The expansion tanks are always positioned at the right altitude:
no room for installation mistakes any longer.

The system is made from high quality aluminium and is weather protected thanks to the anti corrosion treatment.

40230626	TOP-COOL Radiator for W-SC 6 and W-SQ 6
40230627	TOP-COOL Radiator for W-SC 10
40230628	TOP-COOL Radiator for W-SQ 8
40230629	TOP-COOL Radiator for W-SQ 12
40230630	TOP-COOL Radiator for W-SQ 16
40230631	TOP-COOL Radiator for W-SC 15, W-SQ 12 3ph, W-SQ 16 3ph
40230632	TOP-COOL Radiator for W-SC 20, W-SQ 20 and W-SQ 25

TECHNICAL SPECIFICATIONS

Voltage	230 VAC
Frequency	50/60Hz
Frame material	Aluminium, powder coated
Color	White (RAL9003)

DIMENSIONS & WEIGHT

Length:	1420 mm
Width:	584 mm
Height:	256 mm
Total weight:	42-52 kg*

* depending on type

INSTALLATION DRAWING TOP-COOL

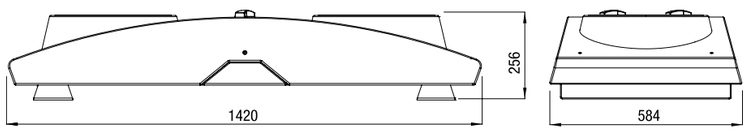

smart energy solutions

Exhaust Systems

WhisperPower WATERHUSH exhaust system mounted on a generator set

Dry Exhaust kit

Art. no.

WHISPERPOWER WATERHUSH© EXHAUST SYSTEM

This all-in-one exhaust system is available as a kit for mounting on the backside of the WhisperPower generator set.
Thanks to the WATERHUSH exhaust system the exhaust gases will be cooled in such way that a rubber hose is sufficient to do the job.

Advantages of the WhisperPower WATERHUSH exhaust system:
- Effective sound protection. Low noise and less vibrations thanks to the integrated silencers and the robust metal sound shield.
- More space will be available inside the vehicle, thanks to the compact dimensions.
- All-in-one exhaust system: less installation time. The system can be directly connected to a rubber exhaust hose.
- Integrated water cooling of the exhaust fumes. No hot gases will leave the system.

40230610	WATERHUSH exhaust system W-SC 6, W-SQ 6 and W-SC 10*
40230611	WATERHUSH exhaust system W-SQ 8 and W-SQ 12*
40230612	WATERHUSH exhaust system W-SQ 16*

* Available from February 2011

DRY EXHAUST KIT

Although the WATERHUSH exhaust system is in most cases the best choice for installation in mobile vehicles, there are specific situations where the implementation of a Dry Exhaust kit is a good alternative.

The Dry Exhaust kit contains two silencers: an absorption and a resonance muffler.

40201320	Dry exhaust kit 1” for the W-SC 6
40201875	Dry exhaust kit 1.5” for the W-SC 10, W-SQ 6, W-SQ 8, W-SQ 12 and W-SQ 16
40201889	Dry exhaust kit 2” for the W-SQ 25

INSTALLATION DRAWING ABSORPTION MUFFLER / RESONANCE MUFFLER 1.5”

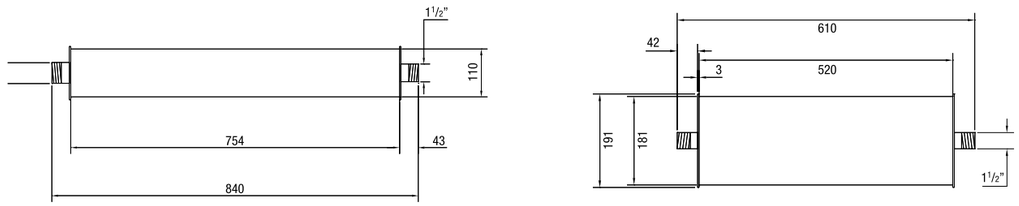

smart energy solutions

off-grid

Smart energy solutions

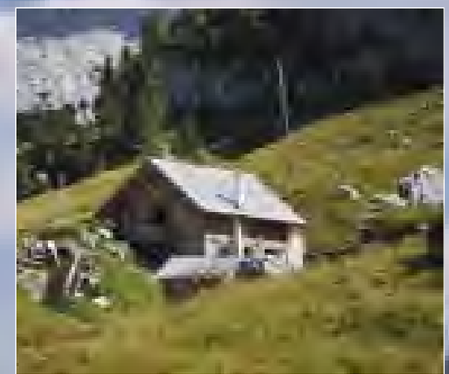

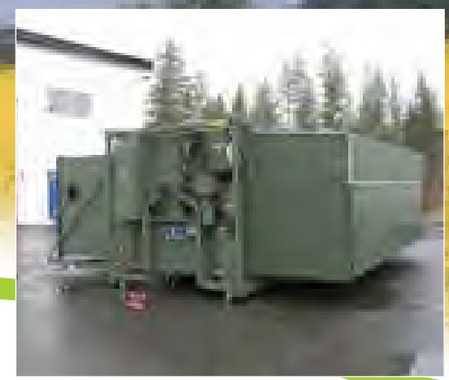

For locations without a power grid, or one you can depend on, WhisperPower offers the perfect solution. We can provide a suitable energy supply with a generator system that is efficient and silent, where required linked to other sources such as an existing solar system or in combination with wind energy.

smart energy solutions

W-TG 3000
Portable diesel generator

Art. nr.		
41401001	W-TG 3000	available from Q4-2010

PORTABLE DIESEL GENERATOR W-TG 3000

The WhisperPower Portable generators are fully self contained (fuel tank, starter battery, exhaust) and ready for operation.
For “fast power” up to 2.8 kW the air cooled W-TG 3000 brings a low cost solution.
Being more noisier that our mobile generators the W-TG 3000 complies with CE regulations for the use of transportable machinery in public area’s: 2000/14/CE.

Standard features: Automatic air bleeding mechanism, AC Voltmeter, AC circuit breakers, additional DC output, DC over current protection, extra large fuel tank with fuel gauge, large capacity exhaust silencer, starter battery.

GENERATOR SPECIFCIATIONS

Continuous power	2,8 kW (at power factor cos phi = 1.0)
Maximum power	3 kW
Nominal voltage	230 V
Nominal frequency	50 Hz ±
Maximum current	13 Amps
Nominal speed	3000 rpm
Voltage regulation	AVR
DC output	12 V / 8,3 Amps
Running time at full tank	12 hours

ENGINE SPECIFICATIONS

Engine	1 cylinder, 4 stroke, air cooled direct injection, diesel engine
Continuous power	5 HP
Bore and stroke	78 x 64 mm
Displacement	306 cc
Cooling system	Forced air cooling
Lube oil capacity	1,1 Liter
Starting system	Starter motor
Voltage regulation	AVR
Fuel tank capacity	12,5 Liter
Alarms	Low oil pressure alarm

DIMENSIONS & WEIGHT

Length:	720 mm
Width:	480 mm
Height:	645 mm
Dry weight:	106 kg including starter battery

smart energy solutions

W-GV 4 Basic Genverter
Basic generator Variable speed

W-GV 4 Basic, service side

DDC control panel ‘Digital Diesel Control’, supplied as standard with all sets

Art. nr.		
41002000	W-GV 4 Basic	available from Q4-2010

AC SYSTEM SPECIFICATIONS

System output continuous	3.8 kW at max rpm
Max output power	36 A
Output voltage / frequency	230 V / 50 Hz [1]
Harmonic distortion	< 5%

ALTERNATOR SPECIFCIATIONS

Type	Permanent Magnet Alternator (PM)
RPM range	2400-3600 rpm
Efficiency	94%

ENGINE SPECIFICATIONS

Engine	WhisperPower
Cylinder	1
Capacity	300 cc
Engine cooling	oil-cooled / oil cooler (internal)
Fuel consumption (no load - full load)	0.8 - 1.5 l/hr
Starting	electrical
Starter battery	12 V / 55 Ah

REMOTE CONTROL FOR GENVERTER BASIC GENERATOR

40209102	DDC panel: Digital Diesel Control, standard for every Whisper generator
40209102	Additional 2nd panel: DDC panel/slave version for second start/stop location
	See page 69 for optional displays, controls and pc-link

1) 120 V / 60 Hz optional

DIMENSIONS & WEIGHT

Length:	630 mm
Width:	480 mm
Height:	520 mm
Dry weight:	92 kg
Dry exhaust pipe:	Ø 1 inch BSP

INSTALLATION DRAWING W-GV 4 BASIC

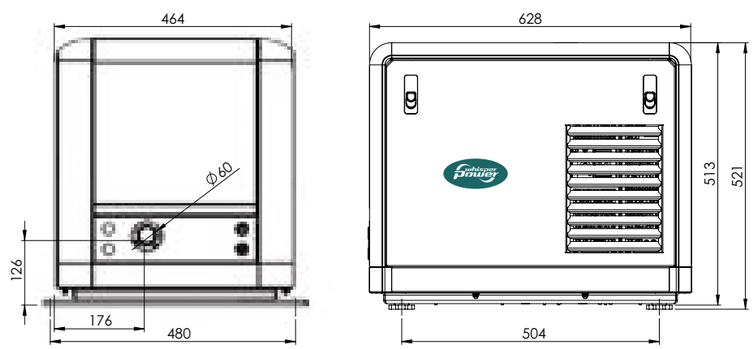

smart energy solutions

W-GV 4DC Genverter

DC generator variable speed

DC Generator / Battery charger

DDC control panel 'Digital Diesel Control', supplied as standard with all sets

Art. no.		
41003000	W-GV 4DC	available from Q3-2011

DC SYSTEM SPECIFICATIONS

Battery voltage	24 VDC [1])
Battery Charging current	150 A (adjustable)
Charge characteristic	3-step, temp. compensated

ALTERNATOR SPECIFICATIONS

Type	Permanent Magnet Alternator (PM)
Continuous rated power 3000 rpm	3.3 kW
Efficiency	94%
RPM	variable

ENGINE SPECIFICATIONS

Engine	WhisperPower
Cylinder	1
Capacity	300 cc
Engine cooling	oil-cooled / oil cooler (internal)
Fuel consumption (no load - full load)	0.8 - 1.5 l/hr
Starting	electrical
Starter battery	12 V / 55 Ah

REMOTE CONTROL FOR GENVERTER GENERATOR

40209102	DDC panel: Digital Diesel Control, standard for every Whisper generator
40209102	Additional 2nd panel: DDC panel/slave version for second start/stop location
	See page 69 for optional displays, controls and pc-link

[1]) 120 V / 60 Hz optional

DIMENSIONS & WEIGHT

Length:	630 mm
Width:	480 mm
Height:	520 mm
Dry weight:	80 kg
Dry exhaust pipe:	Ø 1 inch BSP

INSTALLATION DRAWING W-GV 4DC

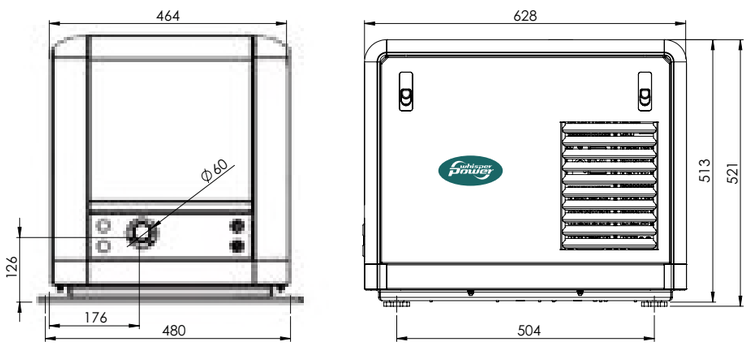

smart energy solutions

W-GV 5i Genverter

Hybrid generator variable speed

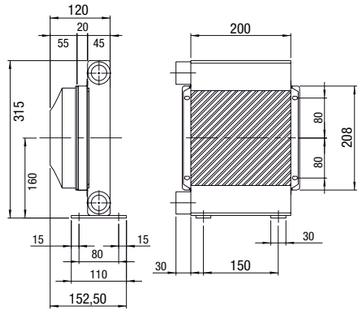

Art. no.		
41001000	W-GV 5i - 24 V DC	available from Q1-2011
41001500	W-GV 5i - 12 V DC	available from Q2-2011

AC SYSTEM SPECIFICATIONS

System output continuous	5 kW
Silent mode	2 kW (AC via battery)
Peak power (5 sec)	10 kW
Output voltage / frequency	230 V / 50 Hz [1])
Output voltage form	sinus
Parallel use (multiple systems)	yes
Parallel with land power / utility	yes (BOOST function)

DC SYSTEM SPECIFICATIONS

Battery voltage	24 VDC or 12 VDC [2])
Battery Charging current	100 A (24 V) / 150 A (12 V)
Charge characteristic	3-step, temp. compensated

ALTERNATOR SPECIFICATIONS

Type	Permanent Magnet Alternator (PM)
Continuous rated power 3000 rpm	3.0 kW without inverter
Peak power rated at 3600 rpm	5 kW with inverter
Efficiency	94%
RPM	2250 - 3600, variable

AUTOMATIC TRANSFER SYSTEM

Transfer time	10 - 20 ms
Max current	50 A

ENGINE SPECIFICATIONS

Engine	WhisperPower
Cylinder / Capacity	1 / 300 cc
Engine cooling	oil-cooled / oil cooler (external)
Fuel consumption (no load - full load)	0.8 - 1.5 l/hr
Starting	electrical

REMOTE CONTROL FOR GENVERTER HYBRID

40209102	Panel/slave version for second start/stop location
	Panel as shown at right supplied as standard.
	See page 69 for optional displays, controls and pc-link

[1]) 120 V / 60 Hz optional [2]) Battery voltage 48 VDC optional

DIMENSIONS & WEIGHT

Length:	630 mm
Width:	480 mm
Height:	520 mm
Dry weight:	103 kg
Dry exhaust pipe:	Ø 1 inch BSP

INSTALLATION DRAWING W-GV 5i

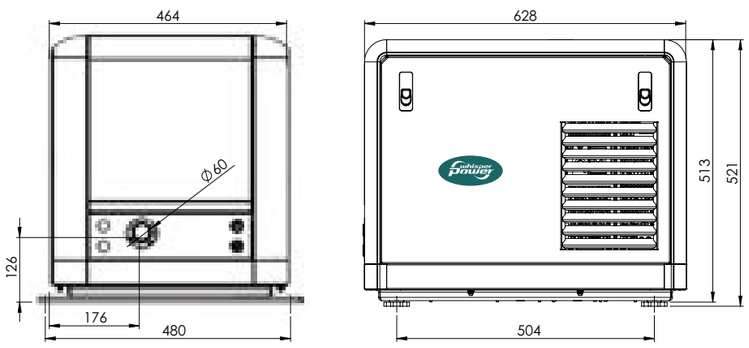

smart energy solutions

W-GV 5i Genverter

Hybrid generator variable speed

COMBINED SOLAR/WIND/DIESEL SYSTEM

For applications with energy consumption of some 5 kWh per day (e.g. in homes for a family of four) like in cabins, chalets, private homes, remote communication sites and back up systems, the Genverter 5i plus Battery Pack is an ideal solution to provide AC and DC power during periods Wind and Solar power sources are insufficient powerful.

KEY FEATURES OF SUCH SYSTEM:

Plug-and-play configuration with the following key components: maintenance free long life GEL, AGM or Lithium-ION battery pack, cable connections between the battery and the Genverter, a variable speed diesel generator with high efficient permanent magnet fly wheel alternator, a premium class power electronics module containing a high efficient sine wave inverter, a switch-mode high efficient battery charger and an automatic transfer switch between land/inverter and consumers.
Optional: solar array charge regulator with MPP control and monitoring protection devices and breakers - solar modules and/or wind generator (have to be ordered separately). The oil cooler/radiator is coming as standard with the system.
An additional boiler/heater kit is available to connect the boiler/heater to the power Genverter power system (see page 22 of this catalogue).
Please consult us for you specific system requirements.

smart energy solutions

Custom made systems

WHISPERPOWER POWER PACKS

We offer complete power packs which can be installed in cabins, containers and shelters.
The watercooled diesel generator can be used for heating purposes as well.

These systems are normally delivered with:
- Radiators and expansion tanks for cooling
- Exhaust mufflers
- Diesel fuel tank
- 230 V (or 120 V) AC outlets
- Fuses for fans

Also available for 3-phase output voltage.
Monitoring & Control (on unit and remote).

MODELS

W-SQ 6	Pre-Install
W-SQ 8	Pre-Install
W-SQ 12	Pre-Install
W-SQ 16	Pre-Install
W-SQ 20	Pre-Install
W-SQ 25	Pre-Install

W-SQ 6 Pre-installed, ready to use

INSTALLATION DRAWING

(System W-SQ 6 pre-installed)

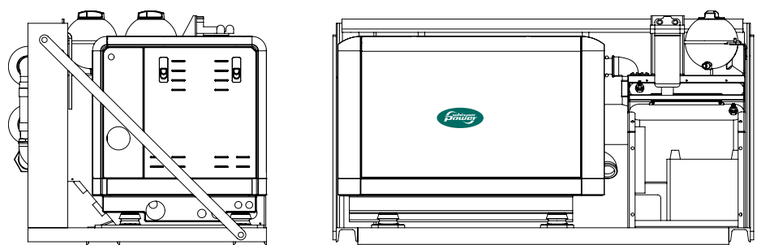

smart energy solutions

for general use

Smart energy solutions

smart energy solutions

Remote Control panels

DDC control panel 'Digital Diesel Control'

WhisperConnect Interface

Art. no.

REMOTE CONTROL FOR WHISPER GENERATOR

WhisperPower generator sets are supplied with this very advanced digital "Digital Diesel Control" system.
The DDC performs automatic starting and stopping, it offers many monitoring functions and shows a large number of actual and historical parameters.
Further it supports faultfinding and maintenance.
Suitable to operate with conventional or CAN-bus based communication protocols.

40209102 DDC panel: Digital Diesel Control, standard for every Whisper generator
40209102 Additional 2nd panel: DDC panel/slave version for second start/stop location

67030510 PC Link Industrial, RS485/USB ISO

INTERFACE TO OTHER BUS SYSTEMS

67030500 WhisperConnect Interface:
From Whisper system (RS 485) to for example MasterBus.
Includes connectors and 1 metre of cable.

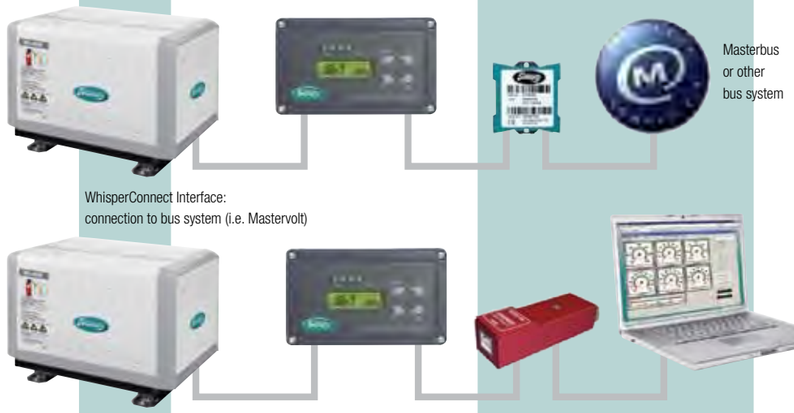

WhisperConnect Interface:
connection to bus system (i.e. Mastervolt)

PC Link between Whisper and
PC - for adjustment and/or monitoring

INSTALLATION DRAWING DDC PANEL

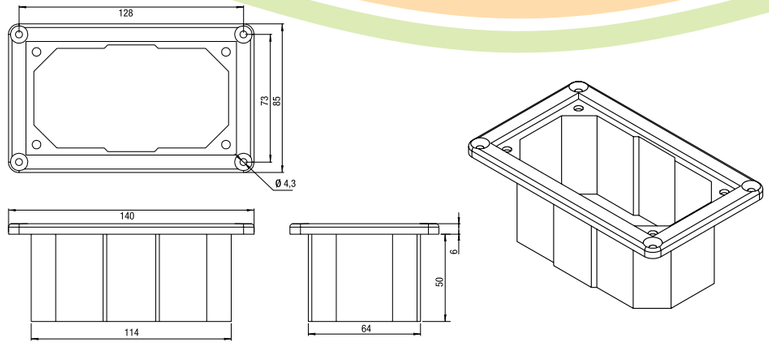

smart energy solutions

Remote Control panels

High resolution full color touch screen (7 Inch)

WhisperConnect Interface,
standard delivered with 'touch' panel

Art. no.

FULL COLOR TOUCH SCREEN (7 INCH)

All relevant information about the generator system is clearly indicated on this high resolution 7" TFT widescreen (16:9) display with LED backlight and full vector graphic capabilities. The panel include a set-up mode for automatic starting and stopping, high accuracy Volt/Hz/A/kVA read-out and a starter battery status indicator.
Extended historical information, time-to-service and various alarms are standard features for the touch screen display.

Suitable to operate with conventional or CAN-bus based communication protocols.
- 7" TFT color display, LED backlight
- 800 x 480 pixel (WVGA) resolution, 64 K colors
- Advanced vector graphics
- Resistive touchscreen
- 64 MB user memory
- 10/100 Ethernet interface, USB interface
- Connection to bus systems using optional plug-in modules
- Slim design. Mounting depth less than 50 mm

40280101 Full color touch screen (7 Inch)

67030501 Whisper Connect Interface PS:
from Whisper system (RS 485) to for exampleMasterBus including Power Supply.
Includes connectors and 1 metre of cable.

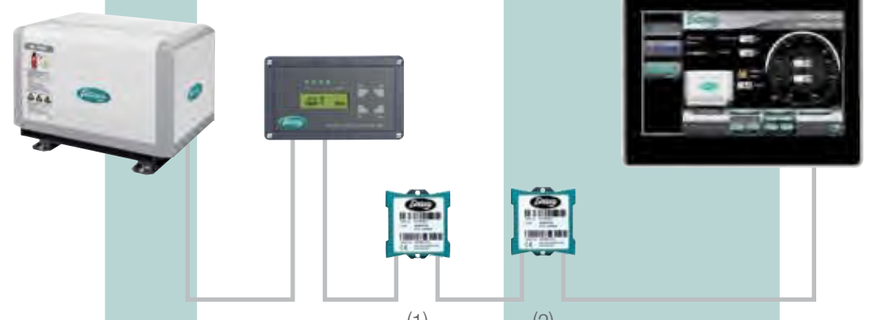

For connection between 7 Inch Touch-Panel and Whisper are WhisperConnect interface (1) and Mod-Bus interface (2) required

DIMENSIONS

Length = L:	187 mm
Height = H :	147 mm
Width = D+T:	45 + 4 mm
Cut-out = A x B:	176 x 136 mm

INSTALLATION DRAWING TOUCH SCREEN

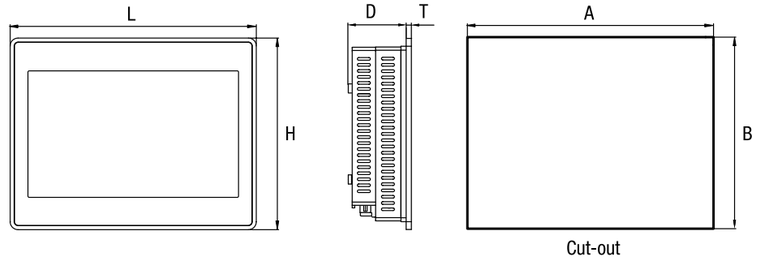

smart energy solutions

AC Power Distribution

WHISPERPOWER AC POWER DISTRIBUTION

We offer a comprehensive range of DC and AC Power Distribution Systems to operate as a fail safe “junction” of the various power inlets and outlets. We make these systems, to your requirement, as analogue or solid state digital devices. Below we have listed our transfer/distribution systems.

WHISPERSWITCH BASIC:

AC switch for landpower/generator with automatic switching between these sources, one output.

WHISPERSWITCH MULTI:

As above, with various outlets containing automatic circuit breakers.

WHISPERSWITCH EXTENDED:

Various inlets: land power, generator, inverter, with automatic switching between the sources, outlets include circuit breakers and an attractive Whisper Monitoring panel.
Includes Automatic Power Management Control to prevent land power breaker disconnect.
Includes Power Support Boost mode.

Next cataloque editon will include detailed technical specifications.

RECOMMENDED STARTER BATTERIES FOR WHISPERPOWER GENERATORS:

Generator model	Battery model
W-SC 3 / W-SC 3.5	AGM 12 V / 55 AH
W-SC 6 t/m W-SC 20	AGM 12 V / 80 Ah
W-SQ 6 t/m W-SQ 16	AGM 12 V / 80 Ah
W-SQ 20 / W-SQ 25	AGM 12 V / 145 Ah

Maintenance free heavy-duty batteries

AGM power

Art. no.

AGM POWER

	Type	Dimensions (l x w x h)	Weight
40290060	12 V / 55 Ah deep cycle AGM battery *)	229 x 138 x 235 mm	18 kg
40290061	12 V / 80 Ah deep cycle AGM battery	350 x 167 x 180 mm	24 kg
40290031	12 V / 100 Ah deep cycle AGM battery	328 x 172 x 222 mm	30 kg
40290062	12 V / 145 Ah deep cycle AGM battery	340 x 173 x 285 mm	44 kg
40290063	12 V / 200 Ah deep cycle AGM battery	522 x 240 x 219 mm	60 kg
40290064	12 V / 260 Ah deep cycle AGM battery	520 x 268 x 220 mm	74 kg

M8 Bolt connection for all battry models

Deep cycle Absorbed Glass Mat battery with 10 years floating design life, specially designed for frequent cyclic discharge usage. By using strong grid and specific paste plate, it makes battery have 30% more cyclic life time than standby series. Products are applicable for marine, mobile energy and PV energy systems.

SPECIFICATIONS BATTERY

	55 Ah	80 Ah	145 Ah	200 Ah	260 Ah
Charge/discharge parameter					
Constant voltage Charging (IU, float)	13.60 to 13.80 VDC at 25°C				
Cyclic Charging (IUU, absorption)	14.25 to 14.60 VDC at 25°C				
Recommended charging current limit	16.5 A	24.0 A	44.0 A	60.0 A	78.0 A
	(higher possible)				
Temperature ratio	4 mv / cell / °C				
Discharge cut off voltage	1.70 V at 0.2 °C (A) <= 1.0°C				
100% depth of discharge d.o.d.					
Rated Capacity at 25°C					
20 hr discharge	58.6 Ah	85.3 Ah	167 Ah	226 Ah	278 Ah
10 hr discharge	55.0 Ah	80.0 Ah	145 Ah	200 Ah	260 Ah
5 hr discharge	44.5 Ah	65.0 Ah	131 Ah	180 Ah	220 Ah
Peukert Coefficient	1.21<P<1.24				
Time reserve min. 25 ampére discharge	92 min.	146 min.	305 min.	455 min.	630 min.
Self discharge	less as 3% per month at 25°C				
Storage time	AGM-power batteries can be stored for maximum 6 months at 25°C. Charging recommended before using.				
Battery parameters					
Cranking amps at 25°C (5 sec)	550 A	800 A	1450 A	2000 A	2600 A
Cycle life (at 80% of D.O.D)	400	400	400	400	400
Internal resistance (approx.)	6.0 MΩ	5.5 MΩ	4.5 M Ω	4.0 M Ω	3.5 M Ω

*) 10 Hr discharge rate to 1.75 V per cell at 25°C

Maintenance free heavy-duty batteries
GEL power

smart energy solutions

Art. no.

GEL POWER - 12 VOLT BATTERIES

	Type	Dimensions (l x w x h)	Weight
40290070	12 V / 100 Ah deep cycle GEL battery*)	328 x 172 x 222 mm	30 kg
40290071	12 V / 145 Ah deep cycle GEL battery	340 x 173 x 280 mm	44 kg
40290072	12 V / 180 Ah deep cycle GEL battery	530 x 209 x 214 mm	53 kg
40290073	12 V / 225 Ah deep cylce GEL battery	522 x 240 x 219 mm	65 kg

Deep cycle GEL battery, with 12 years floating design life, superiorly designed for frequent cyclic discharge applications under extreme temperatures. Strong grid applied to insure reliable performance under frequent cyclic discharge use.
400 Cycles could be available at 100% DOD. Offering extra-durable cyclic performance, high efficiency of recovery, which is more suitable for solar, mobility, marine and deep discharge UPS.

SPECIFICATIONS BATTERY

	100 Ah	145 Ah	180 Ah	225 Ah
Charge/discharge parameter				
Constant voltage Charging (IU, float)	13.60 to 13.80 VDC at 25°C			
Cyclic Charging (IUU, absorption)	14.25 to 14.60 VDC at 25°C			
Recommended charging current limit (higher possible)	20 A	29 A	36 A	45 A
Temperature ratio	4 mv / cell / °C			
Discharge cut off voltage	1.70 V at 0.2 °C (A) <= 1.0°C			
100% depth of discharge d.o.d.				
Rated Capacity at 25°C				
20 hr discharge	100 Ah	145 Ah	180 Ah	225 Ah
10 hr discharge	95 Ah	136 Ah	169 Ah	209 Ah
5 hr discharge	84 Ah	117 Ah	146 Ah	181 Ah
Peukert Coefficient	1.21<P<1.24			
Time reserve min. 25 ampére discharge	165 min.	261 min.	341 min.	450 min.
Self discharge	less as 3% per month at 25°C			
Storage time	AGM-power batteries can be stored for maximum 6 months at 25°C. Charging recommended before using.			
Battery parameters				
Cranking amps at 25°C (5 sec)	1000 A	1450 A	1800 A	2250 A
Cycle life (at 80% of D.O.D)	600	600	600	600
Internal resistance (approx.)	7.5 MΩ	5.0 MΩ	6.0 M Ω	4.0 M Ω

*) 20 Hr discharge rate to 1.75 V per cell ad 25°C. These long life deep cycle batteries are PURE GEL (Not just Gel topping), guaranteeing the longest life time and cycle life. 400 Cycles at 100% DOD

GEL POWER - 2 VOLT CELLS OPzV

	Type	Dimensions (l x w x h)	Weight
40290040	2 V / 600 Ah*)	145 x 206 x 647 (692)**)	49 kg
40290041	2 V / 800 Ah	210 x 193 x 647 (692)	67 kg
40290042	2 V / 1000 Ah	210 x 235 x 647 (692)	81 kg
40290043	2 V / 1200 Ah	210 x 275 x 647 (692)	97 kg
40290044	2 V / 1500 Ah	210 x 275 x 797 (842)	111 kg

*) Capacity at 10 Hr discharge at 20°C. **) (this value) Includes valve on top.
OPzV type battery for verticle or horizontal use with tubular plates for extended cycle life (80% DOD > 1200 cycles).
6 Cells needed for a 12 V battery configuration, 12 cells needed for a 24 VDC configuration.

Maintenance free heavy-duty batteries
ION power

smart energy solutions

Art. no.

ION POWER*) - LITHIUM-ION BATTERIES

	Type	Ddimensions (l x w x h)	Weight
40290050	3.2 V / 40 Ah**)	116 x 44 x 183 mm	1.5 kg
40290051	3.2 V / 100 Ah	179 x 62 x 218 mm	3.5 kg
40290052	3.2 V / 160 Ah	209 x 65 x 280 mm	5.6 kg
40290053	3.2 V / 200 Ah	183 x 100 x 280 mm	7.3 kg
40290054	3.2 V / 400 Ah	461 x 65 x 285 mm	13.5 kg
40290055	3.2 V / 700 Ah	627 x 67 x 306 mm	21 kg
40290056	3.2 V / 1000 Ah	850 x 71 x 375 mm	33 kg

*) Long life ultra safe Lithium-ION batteries for extended (deep) cycle life.
Lighter, smaller and more durable than lead acid batteries.
Units shown are normally in stock.
**) Charge voltage max 4.0 VDC, discharge voltage max 2.8 VDC.
For 12 V 4 cells are needed, for 24 V 8 cells are needed.
High - DC configurations can be obtained in one bank.
Cells in such case pre-installed in heavy duty container.
Battery management system to be included.
Cycle life: 3000 cycles at 80% DOD, 5000 cycles at 70% DOD

EXAMPLE OF A 24 V DC/700 AH LI-ION POWER SYSTEM

Two sets of 12 V DC / 700 Ah
24 V DC / 700 Ah each
BMS integrated
Total weight 168 kg

DRAWING 24 V / 700 AH SERIES CONFIGURATION

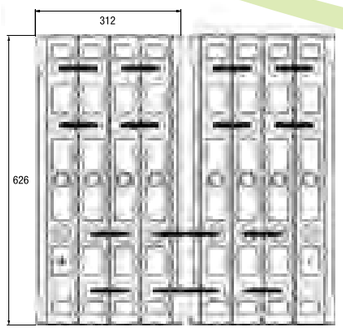

smart energy solutions

custom fit with carriages and frames

Easy installation and maintenance

WhisperPower also offers smart solutions for the installation and maintenance of your generator systems. We have developed a compact and easily accessible method for our custom made systems that features a sliding carriage and pre-installable frame that meets your specific needs.
If you have any particular requirements, contact WhisperPower and we will provide a tailored solution developed just for you.

Custom made systems:
Built to fit with turnkey installation

Say goodbye to installation problems and let WhisperPower custom build and supply your complete generator system. Our Research & Development department will design a fitting solution that meets all your requirements. The technical specialists in our workshop put together the entire installation with all the right accessories, and if required with a rack or carriage for easy installation in your vessel, building or vehicle. WhisperPower delivers your entire system complete with turnkey installation.

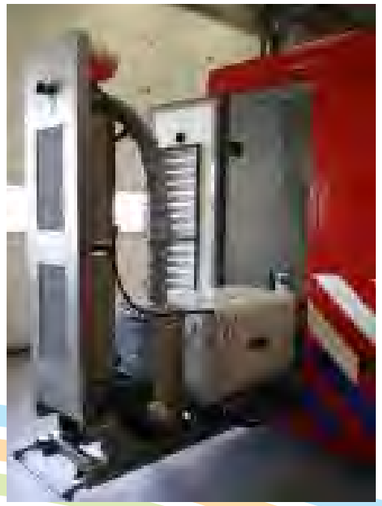

Sliding carriage for easy service:
WhisperPower Slide Out System©

Especially for smaller vehicles (and vessels), WhisperPower has developed a practical carriage with a slide out frame for the WhisperPower generator set. This offers fast and easy maintenance and servicing. Every carriage is custom made based on the specific project specifications.

Plug and play system:
Frames with complete installation

WhisperPower is unique in the industry for the way we work with pre-installed frames that meet your specific size and installation requirements. In a compact way, all the system components are placed on the frame, including generator, cooling radiator, exhaust system, fuel tank and starter battery. Everything is meticulously tested and connected in our workshop, resulting in an easy plug & play system for your specific application.

heavy-duty applications

Special designs

The gensets and generator systems designed by WhisperPower will operate even in the toughest conditions. They are used in increasingly diverse applications by police, fire crews, the army and filmmakers. Over recent years WhisperPower has supplied heavy duty systems for use in vehicles, vessels and command centres. Each system is custom designed in accordance with the supplied specifications. We have listed a few examples below.

System units for UN vehicles: The power to keep it cool

Custom developed WhisperPower generator systems have been used in army shelters and vehicles for several years. We have developed around one hundred W-SQ8 units for UN applications in the Middle East. These heavy duty units easily supply the required power in peacekeeping Hummer vehicles. In outside temperatures far above 40° C they power air conditioning and communication equipment.
Every system is built on a carriage and includes a radiator, starter battery and fuel tank. The three-cylinder Mitsubishi motor and 230 V generator are water-cooled to minimise the chance of dirty air and sand entering the installation.

Units for shelters and command centres

WhisperPower can be found in an increasing number of behind-the-scenes locations such as the command centre in the movable container from the Kennemerland fire brigade (NL). The custom-made generator system was delivered complete and includes radiators for cooling, an exhaust system and all other necessary built-in components.

Specific approvals for our products

All WhisperPower products are designed in compliance with CE regulations and manufactured following the relevant ISO rules. Specific type approvals can be obtained at request, like GL, DNV, Lloyds or ABS. In those cases we will make a detailed quotation for the extra costs related to the certification process. Most of our generator products are in compliance as standard with Russian River Register rules, which are valid for Russia.
For defence applications we have the ability to design and manufacture according to NATO specifications.

smart energy solutions

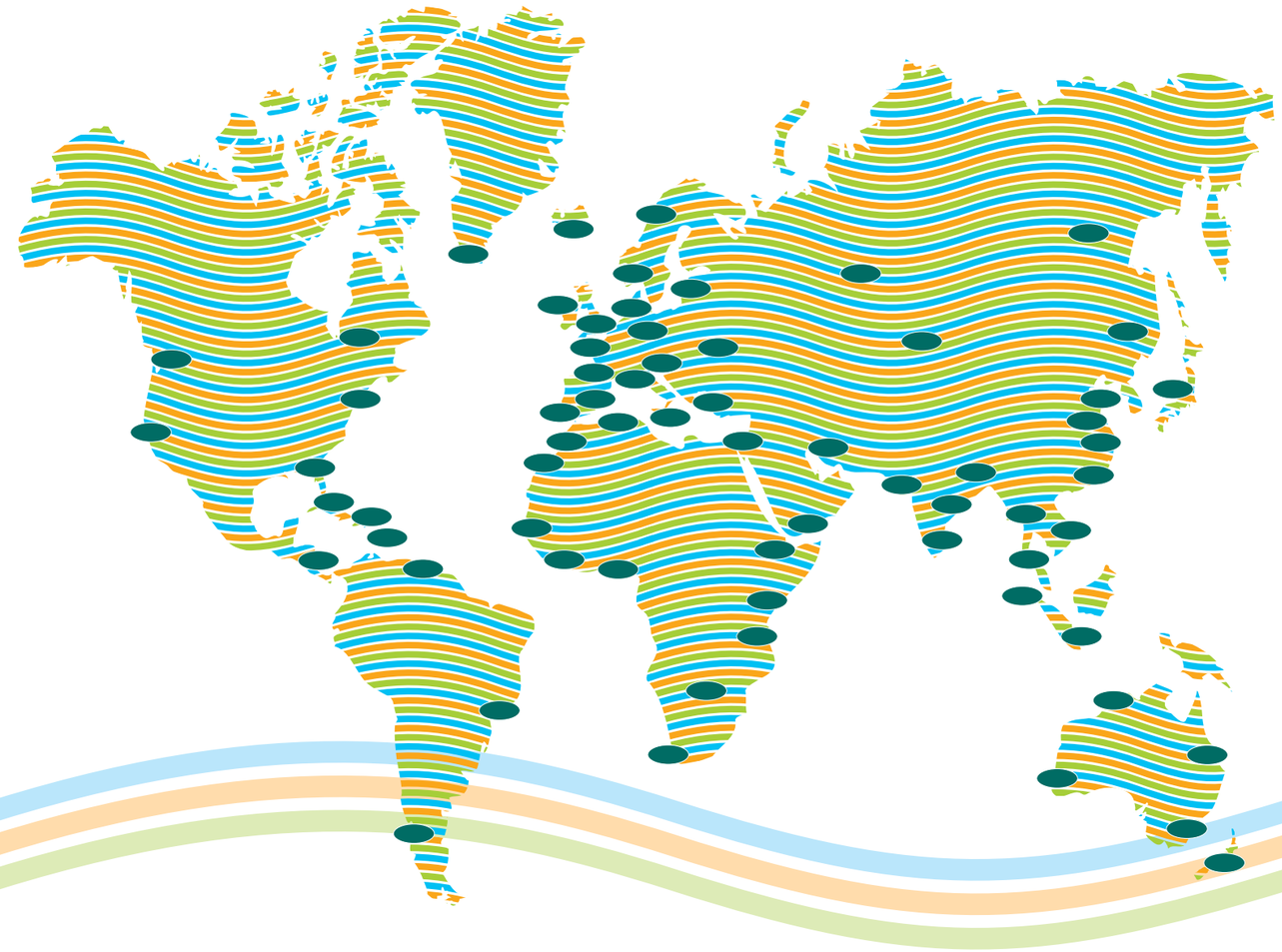

delivered anywhere, at any time

WhisperPower Service & Support

WhisperPower's service and support goes way beyond production and sales.
We remain responsible for our products, systems and accessories, providing all necessary service and support before, during and after your purchase.
This ranges from systems recommendations and installation to first class service for maintenance and repairs.

Bespoke system advice

Our engineers and advisors have a wealth of experience in the development and realisation of electrical power systems and are always available to help you plan your own. This includes installing a genset or genverter and more complex systems. Our designers will ensure the ideal set-up and a system with optimal efficiency, even when combining your generator system with fuel cells or solar or wind generator power.

Global sales & distribution network

The growing network of WhisperPower dealers and distributors covers the world. Our international brand is locally represented by companies including bodywork manufacturers, shipyards, electrical and mechanical contractors and sector specific companies. Their trained specialists and professionals are available for servicing mobile, maritime or domestic applications.

Accurate installation and system set-up

Whenever possible, WhisperPower's technical team will take care of commisioning of your generator system as soon as it is delivered. In several countries - including those in the Benelux region - this service is included in our product offer. This ensures that your system is installed in accordance with the right guidelines and conditions. Contact us for more information about the terms and conditions.

Our starting point: On-site service

The representatives in our network will provide you with service and technical support in case of repairs or malfunctions. Where possible they will help you on site, wherever you may be in the world.

24/7 Hotline for Service & Support:

Our technical service is available in case of malfunctions or repairs. Contact us directly 24/7 from anywhere in the world via the international WhisperPower Hotline Service & Support line on +31 512 571 555.

We will provide support ourselves where possible, or bring you into contact with our local representative.

Periodical training: Up-to-date expertise

Expertise is the foundation for the best service. Every WhisperPower representative has up-to-date knowledge and the benefit of our global experience. Via periodical training courses we ensure our specialists have the latest information on installations and applications as well as our product range. As a result you are guaranteed that WhisperPower offers more than product and packaging: We offer you our expertise as standard.

Minimal downtime during repairs

If necessary, WhisperPower will carry out repairs or maintenance of our products at another location, in a regional workshop or at our head office. In most cases you will be provided with a replacement solution to ensure that your system downtime is kept to a minimum.

Up-to-date product specifications

Detailed specifications of the WhisperPower products are available on our website and in brochures and manuals. As we are continuously improving our products, specifications are subject to change without notice.

smart energy solutions

long-term peace of mind

The WhisperPower WarrantyPlan

When purchasing our products and systems, you always have the certainty of a dedicated WhisperPower WarrantyPlan. This plan covers as standard the costs of repairs and/or replacement of defective parts when products are used in ‘normal’ circumstances.

The conditions for the WhisperPower WarrantyPlan are specific to the product and the use thereof in your system. The standard warranty term for equipment is two years. With an authorised system installations maintenance contract, the warranty term is extended to five years.

The warranty term for generator systems is based on a maximum number of operating hours. For 3000/3600 rpm sets the maximum is 1000 operating hours, for 1500/1800 rpm sets and our Genverter 5i and 50/100/200/kW models the limit has been set at 2000 operating hours. Extra costs for installation, travel and transport are not included, unless agreed otherwise.

More information about the exact conditions of the WhisperPower WarrantyPlan is available on our website.

smart energy solutions

References

MARINE REFERENCES

• Baltic Yachts • Nautor Swan • Siltala Yachts - Nauticat • Hallberg Rassy • Malo Yachts
• Najad • Nord West Yachts • Windy Yachts • Nimbus • X Yachts • Linssen Yachts
• Contest Yachts • C-Yacht • Sturier Yachts • Wim Van Der Valk Yachts • Pacific Yachts
• Van Der Heijden Yachts • Neptunus Shipbuilding • Jachtwerf Mulder • De Boarnstream
• De Alm Jachtbouw • Atlantic • K&M Jachtbouw • Holterman Yachts • Consonant Yachts
• Grootschip • Damen Shipyard Group • Jachtwerf Gruno • Pedro Boat • Pikmeerkruiser
• Rapsody Yachts • Davinci Yachts • Smelne Yachts • Vri-Jon • Vacance • Spirit Yachts
• Privateer • Northshore Yachts • Vennekens • Jeanneau • Beneteau • Menorquin
• Rodman • Discovery Yachts • Oyster Yachts • Rustler Yachts • Braidbair Narrowboats
• Aquastar • Piper Dutch Barges • Faeton Yachts, S.L. • Cockwells Boatbuilder

MOBILE/LAND BASED REFERENCES

• Dutch Police (Koninklijke Marechaussee), The Netherlands • United Nations - Troops In The Middle East (Humvee’s), Middle East
• Beijing Zhonglifeeng Science Development Corporation Co Ltd., China • Van Venrooy Special Vehicle Construction, The Netherlands
• Kongsberg Defence And Aeropspace, Norway • Cuppers Carrosserieën B.V., The Netherlands • Vtm Vlamish Broadcasting, Belgium
• Boeckmann Fahrzeugwerke, Germany • Whittaker Horseboxes, United Kingdom • Roelofsen Horseboxes, The Netherlands
• Chongqing Dima Industry Co Ltd., China • Vdl / Berkhof Coach Company, The Netherlands • Reydams Special Cars Building, Belgium
• Cebotec Commercial Engineering & Body Technology, United Kingdom • Rohde & Schwarz, Singapore • Studiotech Sa, Belgium
• Carrosserie Elenbaas, The Netherlands • Ketterer Spezialfahrzeuge Ag, Germany • Karhof Special Vehicle Construction, The Netherlands
• Moeyersons, Belgium • Fire Fighting Haarlem, The Netherlands • Tam Shelter Construction As, Norway • Action Mobil, Austria
• Dutch Broadcasting, The Netherlands • Evolution Sonderfahrzeuge, Germany • Beijing Police, China • Honac Pon, The Netherlands
• Engineer Service, Ukraine • Scott Medical Ltd., United Kingdom • Chongqing Dima Industry Co Ltd., China • Hymer Mobil, Germany
• JS Fraser Specialist Coachbuilders, United Kingdom

smart energy solutions

POP-UP EXHIBITION WALL
Available for in-house shows or small exhibitions, together with dummy-models of our various products. Dummy-units can be provided at any time

State-of-the-art information material: brochures, leaflets, catalogue, most of them also available in other languages such as German, French, Spanish, Italian, Chinese and Dutch of course

HYBRID POWER

WhisperPower marketing
Professional promotional support

Our global multi-media approach has put our name on the world map already as a premium systems supplier. We provide our business partners with attractive display material, well designed brochures and various other promotional items. We are always prepared to offer active sales support. Here we show a few examples of our marketing tool kit.

NEW CATALOGUE 2011

The new WhisperPower catalogue is now available in English and Dutch.
German, Spanish, French, Chinese to follow (Q4 2010)

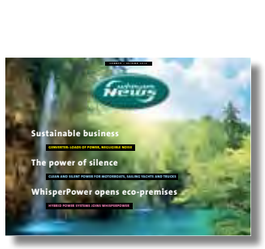

Our WhisperNews glossy magazine keeps you informed and up-to-date on company developments and progress

On our website you will find the latest information and news, go to **www.whisperpower.eu**

service dealer

Our technical sales partners can be recognized by our service dealer sign on their building or vehicle

WhisperPower cap

An attractive line of promotional wear is available for shows and events

Notes

SERVICE & SUPPORT HOTLINE: (24/7)
Tel: +31 (0) 512 571 555
Fax: +31 (0) 512 571 599

PUBLICATION INFORMATION
This catalogue has been developed in close cooperation with the following companies:
WhisperPower Marketing, production & coordination
Guus Vonk, Muiden, copy & concept
Jeroen Vellekoop, Muiden, art & concept
Mock-Up & Make-Up, Monnickendam, dtp
Studio Beeldschoon, Amstelveen, photography
Writewell, Amsterdam, translations
Cliffhanger, Rotterdam, 3D animation,
M1 Design, Heerhugowaard, dtp
Geek Zwetsloot, Haarlem, photography
Frans Foekema, Drachten, photography
Badoux, Houten, printing

We are grateful for the contributions of the following companies:
Mulder Shipyards, Voorschoten
Sturier Yachts, Stavoren
Damen Shipyards, Gorinchem
Malo Yachts, Sweden.
Brandweer Kennemerland
Hymer Mobile, Germany
Harald Paul Expedition

© Copyright 2010, WhisperPower BV, the Netherlands. Text and illustrations reflect the current state of the technology and specifications at the time of publication. We reserve the right to technical changes without prior notice. No liability shall be accepted for printing errors.

smart energy solutions

information and contact
Adresses

For more information and advice about WhisperPower products and services you can contact our local distributors and technical sales partners.
For an up to date list of adresses and phone numbers go to www.whisperpower.eu.

HEADQUARTERS:
WhisperPower BV,
Kelvinlaan 82,
9207 JB Drachten,
The Netherlands,
Tel: +31 (0) 512 571 550,
Fax: +31 (0) 512 571 599,
info@whisperpower.nl
www.whisperpower.eu

UNITED KINGDOM & IRELAND
Tel: +44 (0) 77 8092 8997

SPAIN & PORTUGAL
Tel: +34 608 733 369

SALES INTERNATIONAL:
Tel: +31 (0) 512 571 565
sales@whisperpower.nl

TECHNICAL SUPPORT:
Tel: +31 (0) 512 571 565
service@whisperpower.nl

SERVICE & SUPPORT HOTLINE: (24/7)
Tel: +31 (0) 512 571 555
Fax: +31 (0) 512 571 599

smart energy solutions

whisper power

smart energy solutions